Technical Service Manual

Built-in Dishwasher

Models

EIDW6105GS0/1 EIDW6305GS0/1 EWDW6505GS0

Electrolux

2008 ALL RIGHTS RESERVED

Section 1

Basic Information

Electrolux

Section 1 - Basic Information 1-1

Table of Contents..... 1-2
Safe Servicing Practices 1-3
Important Safety Instructions 1-4
Product Overview 1-5
Product Features 1-5
Product Specifications..... 1-6
Electrical 1-6
Water Supply 1-6

Section 2 - Installation Information 2-1

Important Safety Instructions 2-2
Safety Precautions..... 2-2
Installation Tips 2-3
Tools and Materials Needed for Installation 2-3
Installation Preparation 2-4
Cabinet Preparation..... 2-4
Roughing In Installation 2-5
Connections For Electrical, Water, and Drain 2-5
Leveling and Anchoring Dishwasher Within Cabinets..... 2-7
To install the Side Mounting Clips 2-7
To install using Top Mount Cabinet Clips..... 2-7
Finishing the Water and Electrical Connection 2-8
Water Line 2-8
Electrical Supply..... 2-9
Finishing the Drain Connection 2-10
Installation Checklist 2-11

Section 3 - Electronic Control 3-1

Electronic Control 3-2
Control Panel (User Interface) 3-2
Description of Keypad Controls 3-3
Auto 3-3
Normal 3-3
Heavy 3-3
Quick 3-3
Eco Wash 3-4
Stemware or Delicate 3-4
Favorite..... 3-4
Rinse..... 3-5
Energy Option Selections 3-5
Hi-Temp Wash 3-5
Sanitize..... 3-5
High Wash Pressure..... 3-6
Low Wash Pressure 3-6
Air Dry..... 3-6
Delay Time 3-6
Start/Cancel 3-6
Status Window..... 3-7
For the Electrolux “A” model control 3-7
For the Electrolux “B” model control 3-7
Locking the Control 3-8
Disable Display 3-8
Dishwasher Control 3-9
Error Code Table for Models EWDW6505G & EIDW6305G 3-10
Engineering Tests..... 3-11
“A” Control 3-11
Display Water Temperature and Turbidity Voltages Test Mode 3-11
Continuous Wash Mode..... 3-11
Discrete Relay/Triac and Sensor Test 3-11
C-Relay Test 3-11
Software Version 3-11
Water Service Test - From Idle Mode 3-11
Acceptance Tests 3-11
Engineering Tests..... 3-12
“B”, ”C” and Panel Ready Control..... 3-11
Discrete Relay/Triac and Sensor Test 3-12
Display Water Temperature and Turbidity Voltages Test Mode (“B” Control)..... 3-12
Continuous Wash Mode (“B” Control) 3-12
Software Version 3-12
Water/Service Test - From Idle Mode 3-12
Acceptance Test..... 3-12
Demo Mode (“A” Control) 3-13
Prior to initiating Demo Mode 3-13
Initiating Demo Mode..... 3-13
Wash Cycle Chart..... 3-14

Section 4- Component Teardown 4-1

Warnings and Cautions 4-2
Door Components 4-3
Kickplate and Toeplate..... 4-3
Outer Door Panel 4-3
Door Handle 4-3
Control Panel Assembly 4-4
Door Latch Assembly..... 4-4
Dispenser Assembly..... 4-5
Door 4-6
Door Seal 4-6
Bottom Door Seal..... 4-6
Pulley Assembly 4-7
Interior Components 4-7
Upper and Lower Rack Assembly 4-7
Lower Spray Arm 4-8
Glass Trap 4-8
Pressurized Fine Filter Assembly 4-8
Center Spray Arm..... 4-8
Vertical Filter..... 4-9
Stainless Steel Filter..... 4-9
Delivery Tube 4-10
Lower Spray Arm Support 4-10
Check Valve Assembly 4-11
Upper and Lower Frame Components 4-11
Valve Service Cover 4-11
Control Assembly 4-12
Door Strike 4-12
Roller Assembly and Guide Rail..... 4-13
Corner Trim and Cabinet Clip Bracket..... 4-13
Top Frame Brace 4-13
Leg and Hinge Assembly 4-14
Top Vent and Fan Assembly..... 4-15
Water Valve..... 4-15
Float Switch 4-16
Side Vent 4-16

Motor and Pump Area Components 4-17
Base Tray 4-17
Flood Switch 4-17
Turbidity Sensor/Thermistor 4-18
Inline Heater Assembly 4-18
Wash Pump and Motor 4-19
Drain Pump 4-20
Drain Valve 4-21
Lower Vent Fan 4-22

Section 5- Parts List and Exploded Views 5-1

Control Components EIDW6105G 5-2
Door Components EIDW6105G 5-4
Upper Frame and Tub Components EIDW6105G 5-6
Motor and Pump Components EIDW6105G 5-8
Lower Frame Components EIDW6105G 5-10
Rack Components EIDW6105G 5-12
Control Components EIDW6305G 5-14
Door Components EIDW6305G 5-16
Upper Frame and Tub Components EIDW6305G 5-18
Motor and Pump Components EIDW6305G 5-20
Lower Frame Components EIDW6305G 5-22
Rack Components EIDW6305G 5-24
Control Components EWDW6505G 5-26
Door Components EWDW6505G 5-28
Upper Frame and Tub Components EWDW6505G 5-30
Motor and Pump Components EWDW6505G 5-32
Lower Frame Components EWDW6505G 5-34
Rack Components EWDW6505G 5-36

Section 6- Troubleshooting 6-1

Troubleshooting Chart 6-2
Error Code Table for Models EWDW6505G & EIDW6505G 6-6

Section 7- Wiring Diagrams 7-1

Wiring Diagram Model EWDW6505G 7-2
Wiring Diagram Model EIDW6305G 7-3
Wiring Diagram Model EIDW6105G 7-4

Safe Servicing Practices

Avoid personal injury and/or property damage by observing important Safe Servicing Practices. Following are some limited examples of safe practices:

1. DO NOT attempt a product repair if you have any doubts as to your ability to complete the repair in a safe and satisfactory manner.
2. Always Use The Correct Replacement Parts as indicated in the parts documentation. Substitutions may defeat compliance with Safety Standards Set For Home Appliances.
3. Before servicing or moving an appliance:
   - Remove power cord from the electrical outlet, trip circuit breaker to the OFF position, or remove fuse.
   - Turn off water supply.
4. Never interfere with the proper operation of any safety device.
5. Use ONLY REPLACEMENT PARTS CATALOGED FOR THIS APPLIANCE. Substitutions may defeat compliance with Safety Standards Set For Home Appliances.
6. GROUNDING: The standard color coding for safety ground wires is GREEN, or GREEN with YELLOW STRIPES. Ground leads are not to be used as current carrying conductors.
   It is EXTREMELY important that the service technician reestablish all safety grounds prior to completion of service. Failure to do so will create a hazard.
7. Prior to returning the product to service, ensure that:
   - All electrical connections are correct and secure.
   - All electrical leads are properly dressed and secured away from sharp edges, high temperature components, and moving parts.
   - All non-insulated electrical terminals, connectors, heaters, etc. are adequately spaced away from all metal parts and panels.
   - All safety grounds (both internal and external) are correctly and securely connected.
   - All panels are properly and securely reassembled

The service technician should be aware of the safety instructions below to make sure the customer is operating the dishwasher in accordance to the Use and Care Manual.

Important Safety Instructions

- Read all instructions before using your dishwasher.
- Use the dishwasher only as instructed in the Use and Care Manual.
- This manual does not cover every possible condition and situation that may occur. Use common sense and caution when installing, operating and maintaining any appliance.
- National Sanitation Foundation (NSF) certified residential dishwashers are not intended for licensed food establishments. Such establishments require a higher dishwasher water temperature to meet commercial sanitization requirements.
- DISHWASHER MUST BE ELECTRICALLY GROUNDED. Read the Installation Instructions for details.
- This dishwasher is designed to operate on regular house current (120 V, 60 Hz). Use a circuit equipped with a 15 ampere fuse or circuit breaker. Use a 20 ampere fuse if dishwasher is connected with a food waste disposer.
- Do not operate dishwasher unless all enclosure panels are in their proper place as explained in the Installation Instructions provided with your dishwasher.
- To avoid entrapment and/or suffocation, remove the door to the washing compartment when removing an old dishwasher from service or discarding it.
- Keep young children and infants a safe distance away from the dishwasher when it is in operation.
- Use only detergents and rinse agents recommended for use in a dishwasher.
- Do not abuse, sit on, or stand on the door or dish rack of the dishwasher.
- Store dishwasher detergent and rinse agents out of the reach of children.
- Do not wash plastic items unless marked “dishwasher safe” or the equivalent. Check with manufacturer for recommendations, if not marked. Items that are not dishwasher safe may melt and create a potential fire hazard.
- If the dishwasher drains into a food disposal, make sure disposal is completely empty before running dishwasher.
- Disconnect electrical power to dishwasher before servicing.
- Repairs should be done by a qualified Electrolux professional.
- Do not tamper with controls.
- Use care unloading the dishware when the SANITIZE option has been selected. Contents may be hot to the touch immediately after the end of cycle.
- When loading items to be washed:
  - Locate sharp items and knives so that they are not likely to damage the tub or door seal; and
  - Load sharp items and knives with the handles up to reduce the risk of cut-type injuries. Alternatively, place sharp items and knives in the utensil shelf located in the upper rack.
- Under certain conditions, hydrogen gas may be produced in a hot water system that has not been used for 2 weeks or more. HYDROGEN GAS IS EXPLOSIVE. If hot water system has not been used for such a period, before using dishwasher, turn on all hot water faucets and let water flow from each for several minutes. This will release any accumulated hydrogen gas. HYDROGEN GAS IS FLAMMABLE. Do not smoke or use an open flame during this time.
- Do not store or use combustible materials, gasoline or other flammable vapors and liquids in the vicinity of this or any other appliance.

⚠ WARNING

This service manual is intended for use by persons having electrical and mechanical training and a level of knowledge of these subjects generally considered acceptable in the appliance repair trade. Electrolux Home Products, Inc. cannot be responsible, nor assume any liability, for injury or damage of any kind arising from the use of this manual.

Product Overview

An Electrolux dishwasher cleans by spraying a mixture of hot water and detergent through the spray arms against soiled surfaces. Each cycle begins with a pre-drain.

Next, the dishwasher fills with water until the filter area is covered with water. Water is then pumped through the filter and spray arms. Soil particles go down the drain as the water is pumped out and replaced with clean water. The number of water fills will vary with the cycle being used.

Product Features

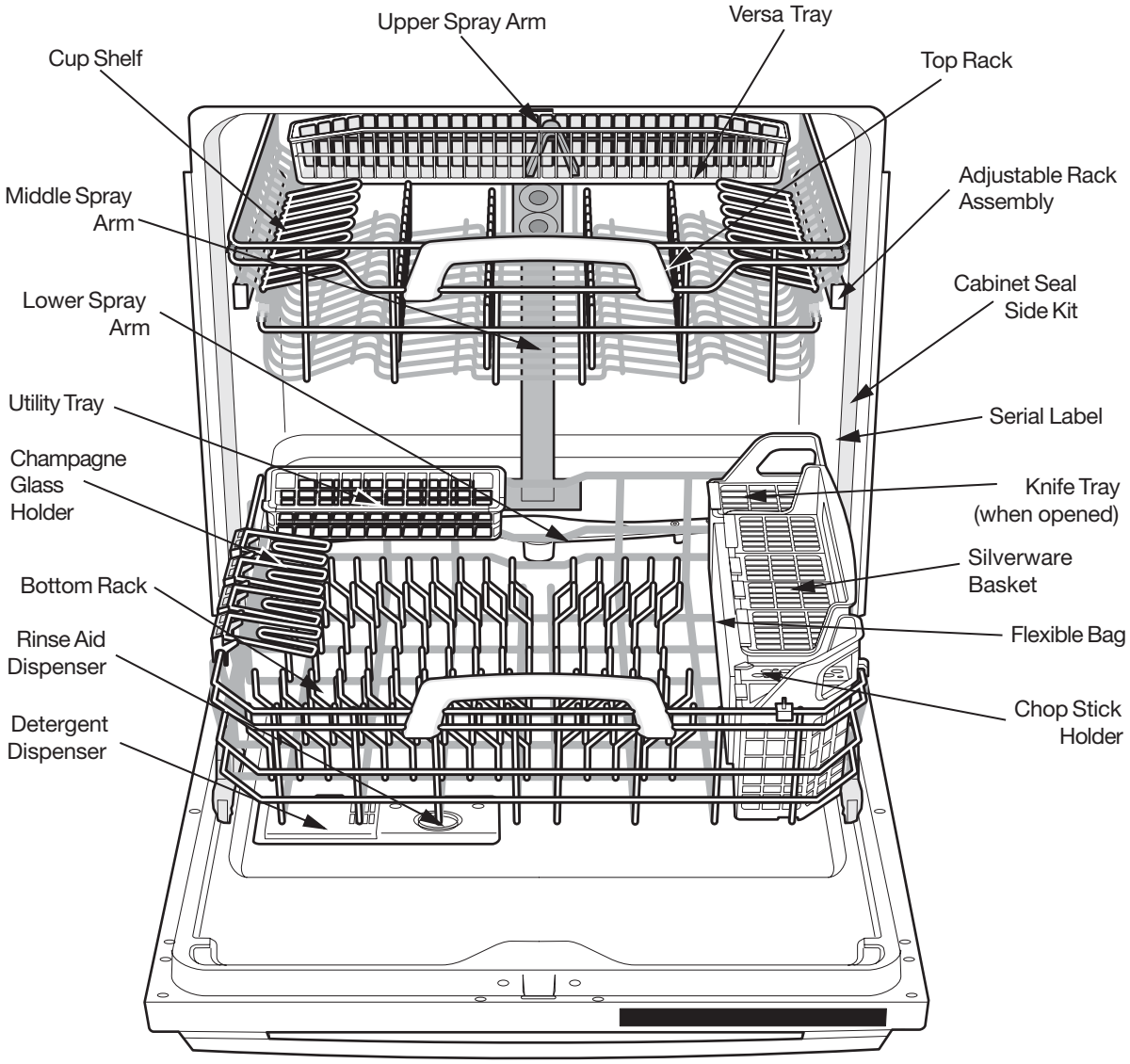

Product Specifications

Electrical

Rating..... 120 Volts, 60Hz
Separate Circuit..... 15 amp min.- 20 amp max.
Motor (Amps)..... 75
Heater Wattage..... 1200
Total Amps (load rated) 10.0
Temp Assure ..... 140°F ±5°F(60°C±3°C) With outer door in place.
Temp Boost ..... 145°F ±5°F (63°C ±3°C) Heated Wash/Heated Rinse
Sanitize ..... 150°F ±5°F (66°C ±3°C)
Hi-Limit Thermostat..... 200°F (93°C)

Water Supply

Suggested minimum incoming water temperature.....120°F (49°C)
Pressure (PSI) min./max. 20/120
Connection (NPT) .....3/8"
Consumption (Normal Cycle) .....4.9 - 9.7 U.S. gal., 18.5 - 36.7 liters
Water valve flow rate (U.S. GPM) 83
Water recirculation rate (U.S. GPM) .....approx. 19
Water fill time. .....87 sec.

Section 2

Installation Information

IMPORTANT SAFETY INSTRUCTIONS

Safety Precautions

Do not attempt to install or operate this appliance until you read the safety precautions in this guide. Safety items throughout this guide are labeled with a Warning or Caution based on the risk type.

WARNING indicates a potentially hazardous situation which, if not avoided, could result in death or serious injury.

Caution indicates a potentially hazardous situation which, if not avoided, may result in minor or moderate injury.

⚠ WARNING

ELECTROLUX CANNOT BE HELD RESPONSIBLE FOR DAMAGE TO PROPERTY OR INJURY TO PERSONS CAUSED BY FAILURE TO COMPLY WITH THE INSTALLATION, MAINTENANCE AND SAFETY INSTRUCTIONS CONTAINED IN THIS SERVICE MANUAL.

⚠ WARNING

TO REDUCE THE RISK OF FIRE, ELECTRICAL SHOCK, OR INJURY WHEN USING YOUR BUILT-IN DISHWASHER, FOLLOW BASIC SAFETY PRECAUTIONS INCLUDING THE FOLLOWING:

- READ ALL INSTRUCTIONS BEFORE OPERATING THE BUILT-IN DISHWASHER.
- BEFORE PERFORMING ANY TYPE OF SERVICE OR INSTALLATION, MAKE SURE THAT ELECTRIC POWER TO THE DISHWASHER IS DISCONNECTED.
- TO AVOID THE POSSIBILITY OF EXPLOSION OR FIRE, DO NOT STORE OR USE COMBUSTIBLE, FLAMMABLE, OR EXPLOSIVE LIQUIDS OR VAPORS (SUCH AS GASOLINE) INSIDE OR IN THE VICINITY OF THIS OR ANY OTHER APPLIANCE.
- THIS APPLIANCE IS EQUIPPED WITH A THREE-PRONG GROUNDING PLUG FOR PROTECTION AGAINST POSSIBLE ELECTRIC SHOCK HAZARDS. PLUG IT ONLY INTO A DEDICATED, GROUNDED ELECTRICAL OUTLET. WHEN ONLY A STANDARD TWO-PRONG ELECTRICAL OUTLET IS AVAILABLE, THE CUSTOMER MUST HAVE IT REPLACED WITH A DEDICATED, PROPERLY GROUNDED THREE-PRONG ELECTRICAL OUTLET BEFORE USING THIS APPLIANCE. DO NOT UNDER ANY CIRCUMSTANCES, CUT OR REMOVE THE THIRD (GROUND) PRONG FROM THE POWER CORD. DO NOT USE AN ADAPTER PLUG. DO NOT USE AN EXTENSION CORD. DO NOT USE A POWER CORD THAT IS FRAYED OR DAMAGED. THE USE OF A GROUND FAULT INTERRUPTER (GFI) IS NOT RECOMMENDED.
- DO NOT INSTALL OR USE A DAMAGED APPLIANCE. IF YOU RECEIVE A DAMAGED APPLIANCE, IMMEDIATELY CONTACT YOUR DEALER OR BUILDER.
- DO NOT USE THE DISHWASHER UNTIL IT HAS BEEN PROPERLY INSTALLED BY A QUALIFIED INSTALLER ACCORDING TO THESE INSTALLATION INSTRUCTIONS. THE INSTALLER MUST SHOW THE CUSTOMER THE LOCATION OF THE POWER PLUG SO THAT THEY KNOW WHERE AND HOW TO DISCONNECT POWER TO THE DISHWASHER.
- DO NOT INSTALL, REPAIR, OR REPLACE ANY PART OF THE DISHWASHER UNLESS SPECIFICALLY RECOMMENDED IN THE LITERATURE ACCOMPANYING IT. A QUALIFIED SERVICE TECHNICIAN SHOULD PERFORM ALL OTHER SERVICE.

⚠ WARNING

DESTROY CARTON, PLASTIC BAGS, AND ANY EXTERIOR WRAPPING MATERIAL IMMEDIATELY AFTER THE DISHWASHER IS UNPACKED. CHILDREN SHOULD NEVER USE THESE ITEMS FOR PLAY. CARTONS COVERED WITH RUGS, BEDSPREADS, PLASTIC SHEETS OR STRETCH WRAP MAY BECOME AIR TIGHT CHAMBERS AND CAN QUICKLY CAUSE SUFFOCATION.

DO NOT PUSH DOWN ON OPEN DOOR. FAILURE TO FOLLOW THIS WARNING CAN RESULT IN SERIOUS INJURY.

CUT HAZARD. TO PREVENT SERIOUS INJURY FROM SHARP EDGES, WEAR WORK GLOVES WHEN HANDLING, UNPACKING OR DISASSEMBLING UNIT.

Installation Tips

Tools and Materials Needed for Installation (Not Included)

- Drill, Electric
- Driver, Socket 5/32”, 1/4” , 5/16”
- Flaring Tool / Tube Cutter (for copper tubing)
- Flashlight
- Level
- Pipe Joint Compound (for iron pipe plumbing) or Pipe Thread Tape (for sealing threads)
- Pliers
- Safety Glasses
- Saw, Keyhole or 1/2”, 11/2” to 2” Hole Cutters
- Screw Drivers, Slotted and #2 Phillips (magnetic tip preferred)
- Tape, Electrical or Duct
- Tape, Measuring
- Wire Stripper or Utility Knife
- Wrench, Hex-end
- Wrenches, 2 Adjustable (for copper tubing)or 2 Pipe wrenches (for iron pipe plumbing)

Parts You Will Need * (Not Included)

- Drain Hose Clamp, 11/4” Diameter
- Brass Elbow, 90° with a 3/8” National Pipe Thread
- Conduit Connector (UL Listed)
- Wire Nuts, three (3) for 12-14 gauge wire (UL Listed)

* If required:

- “Y” Branch Tailpiece and Connector Kit
- Air Gap Kit

All the parts can be found at local hardware, electrical and plumbing supply stores.

Installation Preparation

NOTE: Put unit on its back being careful not to pinch the Water Drain Hose.

1. Remove two (2) screws at front of the kickplate assembly using a #2 Phillips screw driver.
2. Tilt and pull forward to remove. (See Figure 2-1)

NOTE: It is not necessary to remove the outer door for installation.

⚠ WARNING

ELECTRIC SHOCK HAZARD DISCONNECT ELECTRICAL POWER AT THE FUSE BOX OR CIRCUIT BREAKER BOX BEFORE BEGINNING INSTALLATION. FAILURE TO FOLLOW THIS WARNING COULD RESULT IN DEATH OR SERIOUS INJURY.

3. Locate water inlet valve behind kickplate on bottom left underside of unit. The valve has a 3/8” NPT female fitting. Remove pipe plug. (See Figure 2-2)
4. Wrap 90° elbow (not included) with pipe thread tape (or apply joint compound) and thread it into water inlet valve. When tightened, elbow should point toward the left. To prevent bending of bracket or breaking of valve, avoid over tightening. (See Figure 2-2)

Cabinet Preparation:

As a precaution, it is recommended, but not required that the cabinets enclosing all sides of the dishwasher (including the underside of the countertop) be sealed with an oil based paint or moisture-proof polyurethane to prevent possible steam/moisture damage.

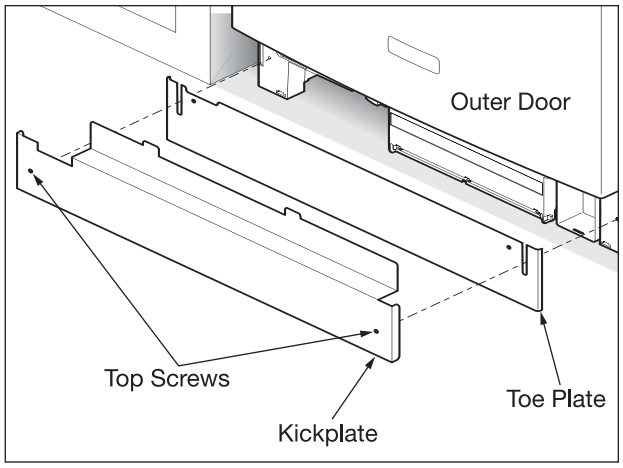

Figure 2-1. Kickplate Removal

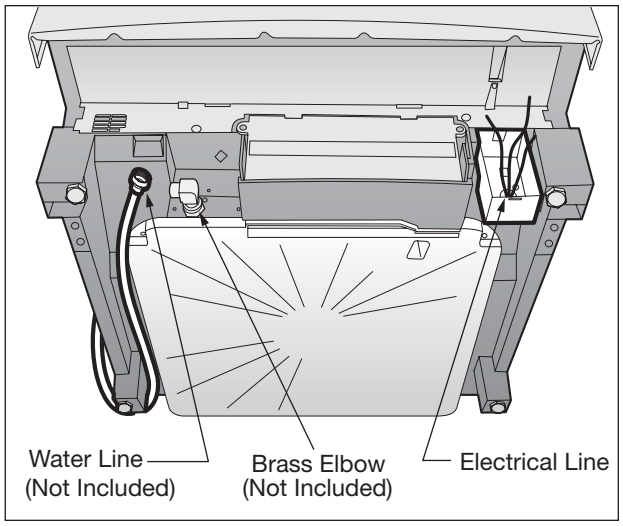

Figure 2-2. Component Location

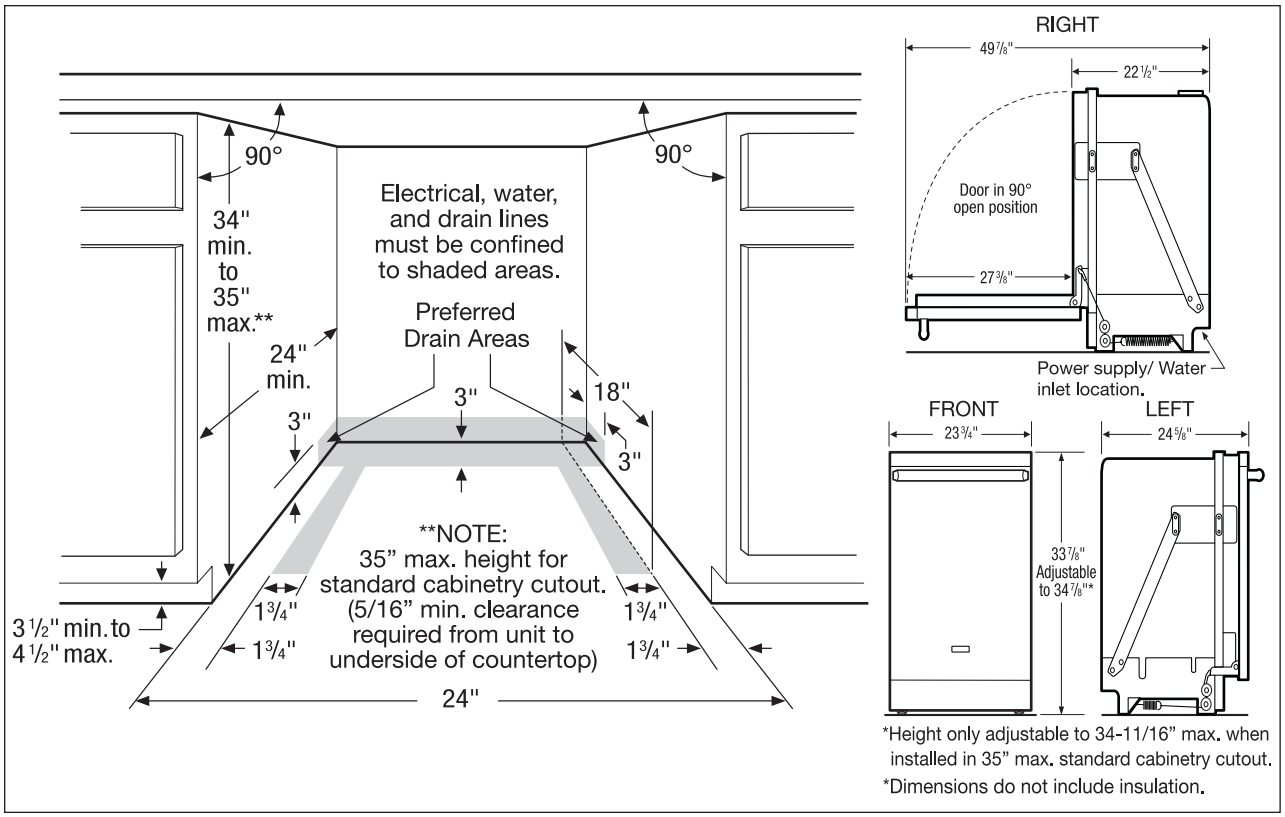

Figure 2-3. Rough-in Dimensions

Roughing In Installation

1. Make sure your location has the correct drain, water, and electrical outlets to make the connections. Do not install unit under a cooktop range. Damage to tub or other components will occur.
2. Floor should be flat and free of any obstruction.

IMPORTANT: For proper operation and appearance cabinet opening should have dimensions as shown in Figure 2-3. If unit is to be placed in a corner, there must be at least a 2-inch side clearance to open door.

IMPORTANT: Drain, water, and electrical lines should be roughed-in before going any further.

NOTE: *If dishwasher is installed at end of a cabinet, sides and back must be fully enclosed.*

NOTE: *Cabinet Seal Kit (Kit # 154662101). This kit provides a seal between the unit and cabinets once installation is complete. (The Installation Instructions are located in the Kit)*

Connections For Electrical, Water, and Drain

1. Review dimensions in Figure 2-3 to locate dishwasher's drain, water, and electrical connections. All utilities must be routed in the shaded areas of Figure 2-3.

IMPORTANT: Disconnect power before starting installation.

2. Locate the electrical supply and the dishwasher's electrical junction box on right underside of unit behind kickplate assembly. (See Figure 2-2.)
3. Determine where you will connect to household hot water supply. Review Figure 2-2 and note the location of water inlet valve. Determine where you will connect the drain hose.
4. Cut access holes for the electrical, water and drain hoses in the shaded areas as shown in Figure 2-3.
5. The dishwasher operates on a 120 volt, 60 Hz electrical supply. Provide a separate circuit with a fuse or circuit breaker rated for at least 15 amps (20 amps if connected with disposer) but not more than 20 amps.

Connections For Electrical, Water, and Drain
(Continued)

6. Pull electrical cable through hole into installation area.
7. Be sure water inlet valve is protected from freezing. If valve freezes and ruptures, flooding may occur.
8. Determine amount of tubing needed to connect hot water supply to the unit's water inlet valve. Extra hose length is necessary. High-pressure and high-temperature stainless flexible hose with a minimum inner diameter of 1/4" may be used. A shut-off valve installed outside the dishwasher cabinet is best.
9. Route water supply line into installation area.
10. Stand dishwasher back upright for further installation.

IMPORTANT: Incoming hot water temperature should be at least 120°F (49°C). Water pressure should be between 20–120 psi.

Drain Hose Connection

⚠ CAUTION

Property Damage

Do not use the furnished drain hose or a rubber garden hose for the water supply line. Either of these hoses can burst. Flooding may occur and cause property damage.

NOTE: Pull the hose from "End Storage Location" side. (See Figure 2-4)

1. Take drain hose out of dishwasher and find the end that doesn't have the black rubber material.
2. Use only the spring clamp that is provided in the accessory kit, place spring clamp over one of the hoses. (See Figure 2-5)
3. Take the plastic side of the drain hose and insert it into the hose that is already attached to the dishwasher make sure hose ends are flush against each other. (See Figure 2-6)
4. Secure the spring clamp 1/8" from large end of black hose to the plastic side that was inserted for best sealing results.

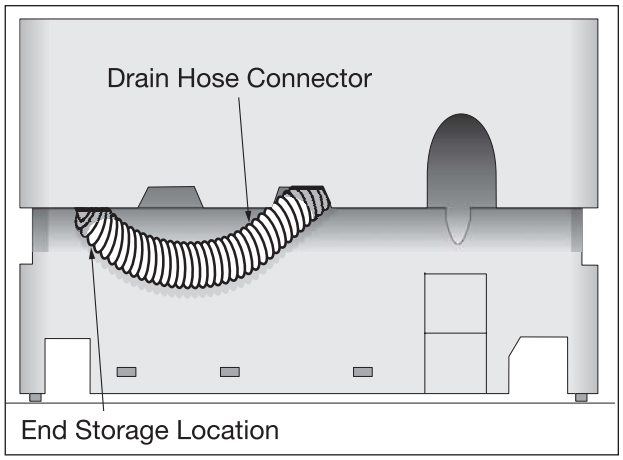

Figure 2-4. Drain Hose Storage Location

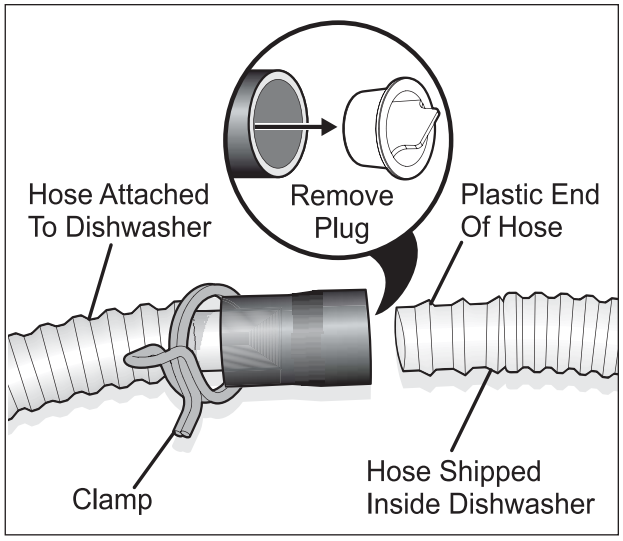

Figure 2-5. Connecting Drain Hose

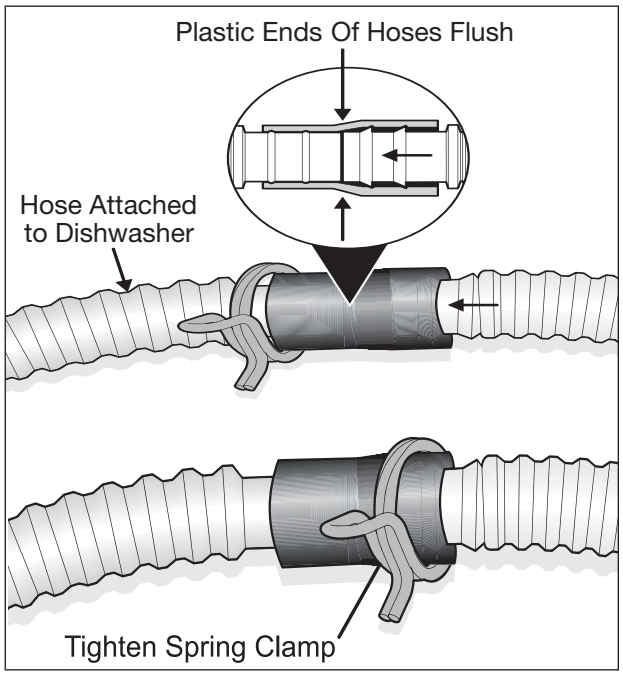

Figure 2-6. Connecting Drain Hose

Leveling and Anchoring Dishwasher Within Cabinets

1. Measure height of cabinet opening from under side of countertop to floor. Check chart for height opening and suggested adjustment.
2. Move dishwasher to front of installation area.
3. Loosen the rear leveling legs by turning counterclockwise. Refer to chart for number of turns.
4. Install the Cabinet Seal Kit (Instructions included in Kit)
5. Choose one of the methods of attachment below to secure unit, holes need to be pre-drilled using a #5 drill bit regardless of the option chosen:

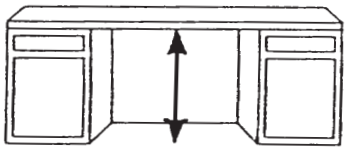

Leg Leveler Adjustment Chart	
Height of Cabinet Opening	Number of Turns to Adjust Levelers
34" (86.4cm)	0
34 1/8" (86.7cm)	2
34 5/16" (87.2cm)	6
34 1/2" (87.6cm)	9

⚠ CAUTION

Use extreme care in mounting the dishwasher as to not scratch, bump or otherwise damage the console or tub.

a. Side Mount Cabinet Clips (Preferred Method of attachment) (See Figure 2-7)
b. Top Mount Cabinet Clips (to be used when Side Mount is not an available option) (See Figure 2-8)

To install the Side Mounting Clips:

Depending on space allowed in the cabinet, the side mounting clips can be installed with the holes for the screw up (preferred method) or down as shown in the illustrations below. (Use extreme caution when the clips are in the down position while installing the dishwasher).

NOTE: Install side mount brackets before unit is installed into the cabinet. Insert screws into the front holes of the mounting clips only. (See Figure 2-7)

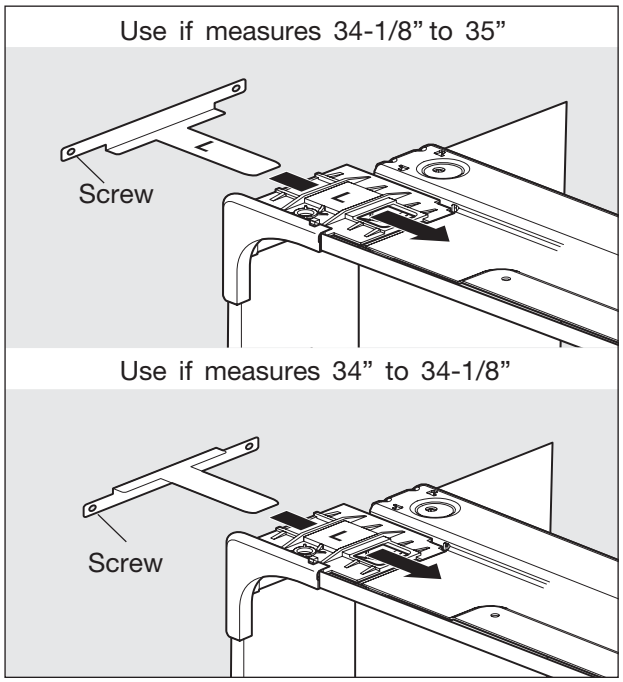

Figure 2-7. Side Mount Cabinet Clips

To install using Top Mount Cabinet Clips:

Depending on the depth of cabinet, the top mount clips have a break off point that can be removed if necessary.

NOTE: Install Top Mount Clips before unit is installed into the cabinet. Screw clips firmly to top brace using screws provided in the literature pack. (See Figure 2-8)

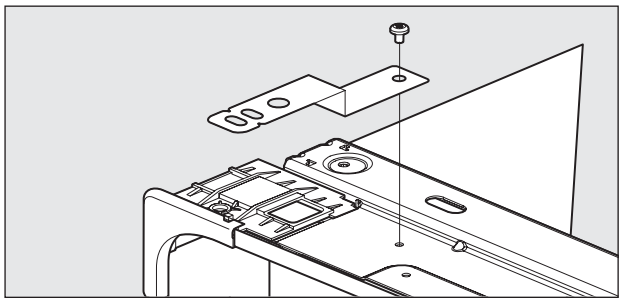

Figure 2-8. Top Mount Cabinet Clips

Leveling and Anchoring Dishwasher Within Cabinets
(Continued)

6. If levelers need to be removed, make sure that the floor is free of all obstructions.
7. Carefully place dishwasher inside cabinet area such that is centered in opening. Use caution when moving dishwasher to prevent damage to cabinet, dishwasher and floor.
8. Front of door needs to be even with the front of adjoining cabinets. Front levelers should allow 5/16” below underside of countertop to top of console.
9. Check that dishwasher is level from side to side by placing a level against the top front section of the tub. (See Figure 2-9)
10. Check that the dishwasher is level from front to back by taking out the lower rack, place level on the lower rack wheel support at the bottom of the tub.
11. Adjust levelers up or down until dishwasher is level. Holes need to be pre-drilled using a #5 drill to secure unit.
12. Screw mounting brackets firmly to cabinet using screws provided in literature packet. (See Figure 2-10)
13. Open and close dishwasher door slowly. Ensure that there is clearance to the console. Adjust accordingly until door opens and closes freely.

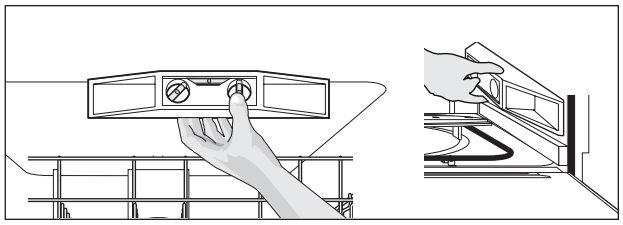

Figure 2-9. Checking Level

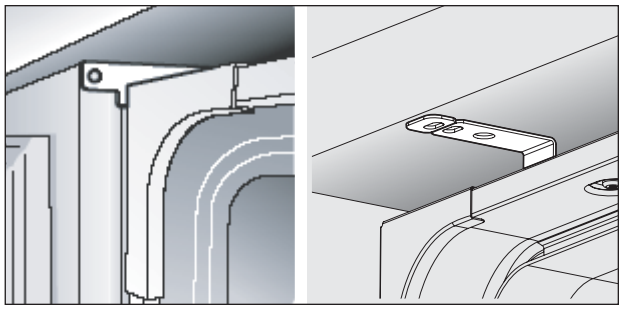

Figure 2-10. Top Mount Cabinet Clips

Finishing the Water and Electrical Connection

Water Line

1. Flush water line before connecting it to water inlet valve to prevent early clogging of filter screen. Place a bunched towel over end of line to prevent splashing. Open water supply valve for a few seconds and let water drain into a pan. Turn off water supply at shut-off valve.
2. Route water line to water inlet valve as shown in Figure 2-2.
3. While firmly pulling water supply line into 90° elbow, tightly connect water supply to water inlet valve. Supply line must be free of kinks, scales, chips, and lubricants.
4. Turn on water supply and check for leaks.

⚠ CAUTION

Property Damage

Do not solder within 6” of the water inlet valve. Damage to the plastic parts in the valve may occur. Use care that no sealer, dirt, or other objects enter the valve. Damage to the filter screen may occur. Be sure the dishwasher is placed where the water inlet valve will be kept from freezing. If the valve freezes, it may rupture and flooding may occur.

Electrical Supply

1. Remove junction box cover and pull house wiring into junction box. (See Figure 2-11)
2. Use a UL listed conduit connector (not included) at box to stabilize wiring.
3. Connect incoming black lead to dishwasher's black lead, incoming white lead to dishwasher's white lead and incoming green lead to dish washer's green lead with wire nuts. (See Grounding Instruction Warning). Wire nuts must be tight.
4. Replace junction box cover.

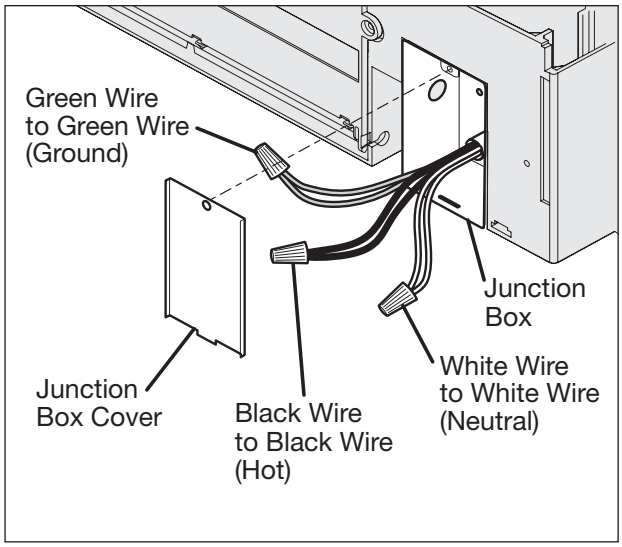

Figure 2-11. Electrical Connections

Check the following for correct installation before proceeding:

1. Water and electrical lines are straight out in front of the dishwasher.
2. All four leg levelers are positioned properly.
3. Cabinet seals are positioned on the sides and top of the dishwasher.
4. Cabinet attachment clips are attached to the cabinet on both corners on top of dishwasher.
5. Replace toe and kickplate.

NOTE: *When replacing toe and kickplate hand tighten screws.*

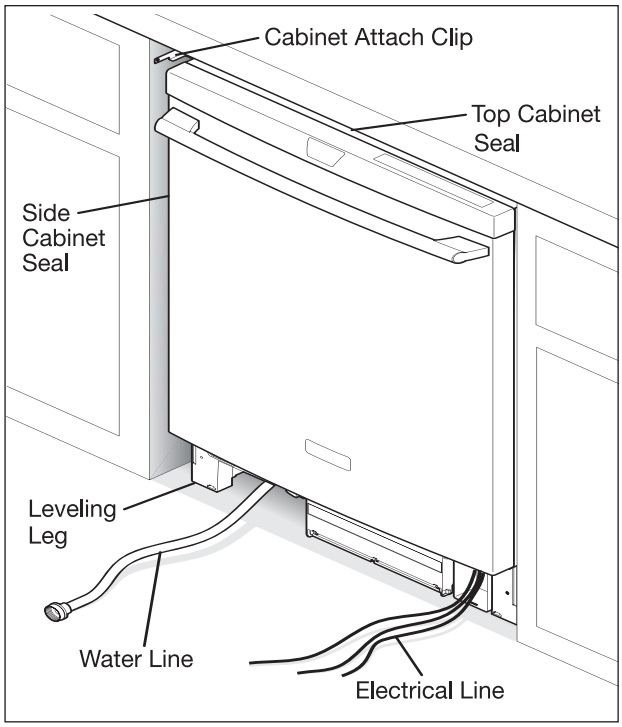

Figure 2-12. Installation Diagram

⚠ WARNING

ELECTRIC SHOCK HAZARD
THE DISHWASHER MUST BE CONNECTED TO A GROUNDED METAL, PERMANENT WIRING SYSTEM OR AN EQUIPMENT-GROUNDING CONDUCTOR MUST BE RUN WITH THE CIRCUIT CONDUCTORS AND CONNECTED TO THE APPLIANCE'S EQUIPMENT GROUNDING TERMINATOR LEAD.

IT IS THE CONSUMER'S RESPONSIBILITY TO CONTACT A QUALIFIED INSTALLER TO MAKE SURE THE ELECTRICAL INSTALLATION CONFORMS WITH THE NATIONAL ELECTRICAL CODE AND LOCAL CODES AND ORDINANCES.

DO NOT CONNECT THE DISHWASHER TO THE POWER SUPPLY UNTIL THE APPLIANCE IS PERMANENTLY GROUNDED.

ALL WIRING CONNECTIONS MUST BE ENCLOSED IN THE JUNCTION BOX. THIS UNIT HAS COPPER LEAD WIRES.

⚠ WARNING

JOINING ALUMINUM BUILDING WIRE TO STRANDED COPPER WIRE SHOULD BE DONE BY A QUALIFIED ELECTRICIAN USING MATERIALS RECOGNIZED BY UL AND LOCAL CODES. DO NOT USE AN EXTENSION CORD. SUCH USE CAN RESULT IN FIRE, ELECTRICAL SHOCK, OR OTHER PERSONAL INJURY.

FAILURE TO FOLLOW THESE INSTRUCTIONS COULD RESULT IN DEATH OR SERIOUS INJURY.

Finishing the Drain Connection

1. Review Figures 2-13, 2-14 & 2-15 to see the different ways to connect dishwasher to drain system. Choose method that best suits your need.
2. If you connect to a sink drain, entry will need to be above trap. A “Y” branch tailpiece and connector kit, not included, will make this method easier and includes all needed fittings and instructions. (See Figure 2-13)
3. If you connect to a sink trap, local codes may require you to install an air gap kit, (not included). The drain hose will be routed from dishwasher to air gap inlet as shown in Figure 2-14. An air gap kit is available from a plumbing supply store. (If the drain hose is installed through the floor, an air gap is necessary).
4. If you connect to a disposer, the large end of drain hose will fit. (See Figure 2-14) The knock out plug must be removed from inside disposer inlet before making the final fit to drain hose.
5. If the cabinet wall is wood, sand edges of hole until smooth and rounded. If cabinet wall is metal, cover all sharp edges with electrical or duct tape to avoid cutting drain hose.
6. Move unit back in place while routing drain hose through access hole. Use caution to pre vent damage to the dishwasher, floor and cabinets.

IMPORTANT: Make sure there are no sharp bends or kinks that might restrict drain flow.

7. Secure drain hose to sink drain, disposer, or separate trap with a clamp. Do not connect hose to horizontal pipe between sink drain and disposer.

IMPORTANT: Be careful not to over tighten clamp or you may damage end of hose.

8. Be sure unit does not rest on drain hose. It should be free of electrical components and door springs. Do not cut corrugated drain hose. Pull excess through cabinet and place under sink. Make sure hose does not come in contact with any sharp edges.

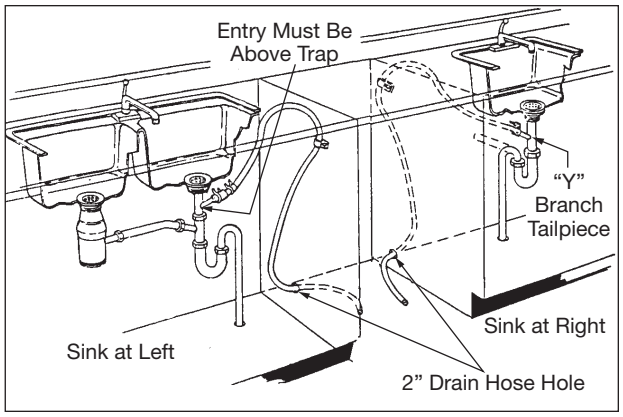

Figure 2-13. Installation Diagram

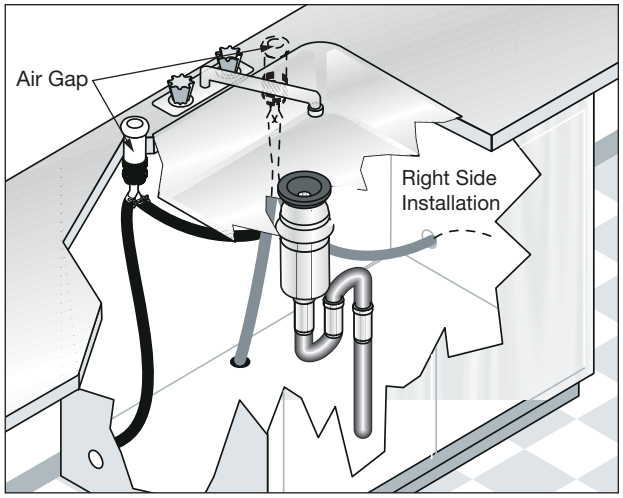

Figure 2-14. Installation Diagram

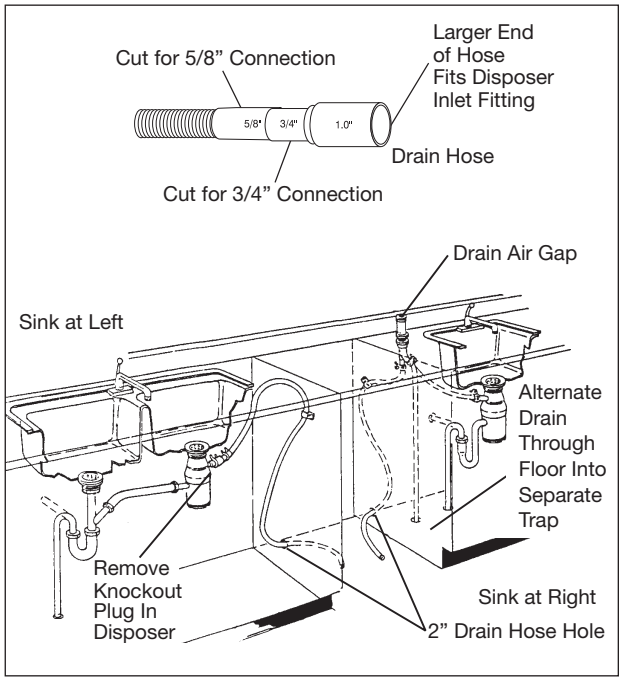

Figure 2-15. Installation Diagram

Installation Checklist

Prior to operating the unit, check the following to assure proper installation.

1. Water and drain lines have no kinks and move freely behind the dishwasher.
2. Water supply is turned on.
3. Joints are free of leaks.
4. Wiring connections to junction box are tight all access panels are secured back in place.
5. Replace kickplate.
6. Drain hose is assembled to Drain Hose Connector.
7. All packing materials and consumer literature have been removed from inside unit.
8. Dishwasher is level and securely fastened.
9. Open and close door to make sure it does not hit surrounding cabinet or countertop.
10. Make sure that all wire ties are removed from the Adjustable Rack Assembly, Versa Tray, Utility Tray and Silverware Baskets.

After following the checklist above, the unit should be operated through at least one fill and pump-out. Then follow the list below.

1. On EWDW6505 press and hold SET Icon for 5 seconds before first use. On EIDW6305 and EIDW6105 press and hold down HI-TEMP Icon for 5 seconds before first use.
2. At first fill, approximately 2 minutes make sure water completely covers filter surface.
3. At pump-out: (pump-out is either when the cycle is completed or canceled. Refer to the Use and Care Manual for Start/Cancel), make sure all water is pumped out.
4. Check water connections again for leaks.

Notes

Section 3

Electronic Control

Electronic Control

Control Panel (User Interface)

Model EWDW6505G features a fully integrated model with a Wave Touch interface mounted on top of the console. This interface is touch sensitive with a alphanumeric display and allows for a clearer description of features and options available for the selected wash cycle. When the cycle is complete a blue light shines on the floor under the door to indicate the cycle is complete. (See Figure 3-1)

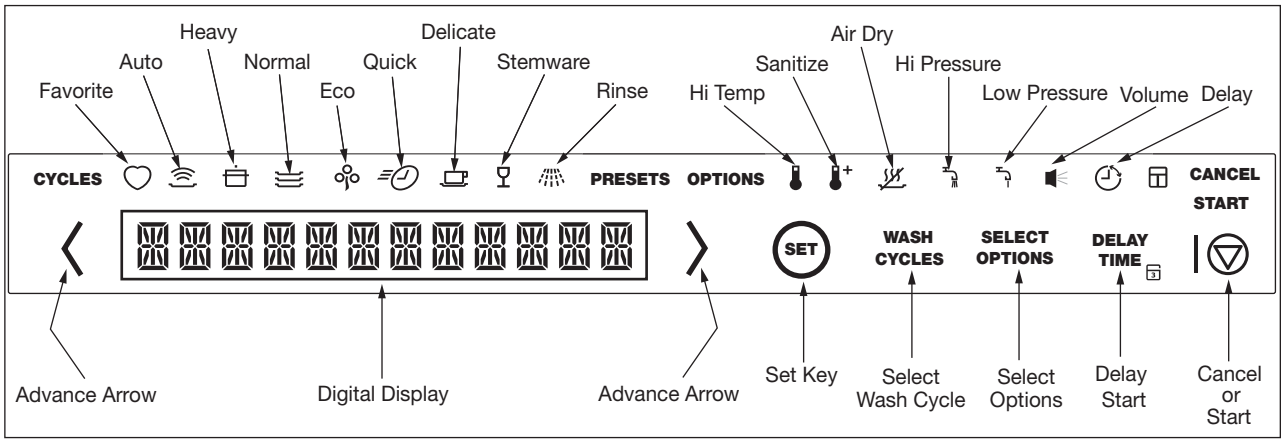

Figure 3-1. User Interface Model EWDW6505G Electrolux Model A Control

Model EWDW6305G features a a tactile switch mounted on the top right side of the console and a display mounted in the front of the console. The tactile switch allows the customer to select wash cycles and options then start the cycle or delay until a later time. The front display shows time remaining in the cycle, any delay, along with cycle status. At the completion of the cycle, "clean" will appear in the display and a blue light will shine on the floor under the door. (See Figure 3-2)

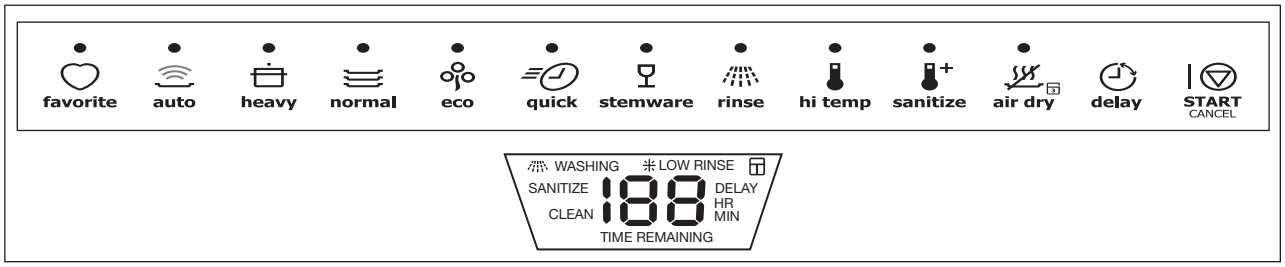

Figure 3-2. User Interface Model EWDW6305G Electrolux Model B Control

Model EIDW6105G features a tactile switch on top right side of the console with no display.
The customer selects the cycle and options, then starts the cycle or delay to a later time. At the completion of the cycle, a clean light will come on and stay on until the door is opened plus a blue light will shine on the floor under the door. (See Figure 3-3)

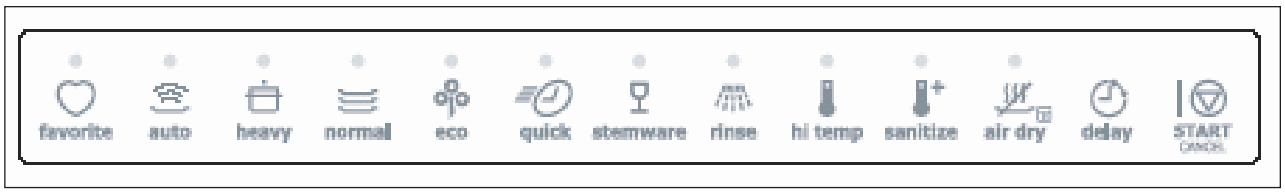

Figure 3-3. User Interface Model EWDW6105G Electrolux Model C Control

Description of Keypad Controls

All of the functions and operations of this dishwasher are dictated and monitored by the electronic control. The control maintains the proper water temperature in the wash and rinse cycles to ensure proper cleaning for the wash cycle selected. (This temperature may not be the same for all cycles.) The control also monitors the soil concentration in the water with the use of a turbidity sensor mounted in the sump.

The following is a brief description of the actions preformed when the keypad is pressed. The Service technician should be familiar with the controls of this unit to assure proper operation when returning the unit to operational status.

Auto (See Figure 3-4)

When a partial load of lightly soiled dishes is placed in the unit, a wash cycle similar to a short wash will automatically be performed. When a full load of heavily soiled dishes is placed in the unit, a heavy wash cycle will automatically be performed. The dishwasher's Smart Sensor technology will determine the type of cycle required to clean the dishes and will clean more efficiently every time. Water usage ranges from 5.9 to 10.0 gallons. Wash time ranges between 89 and 136 minutes.

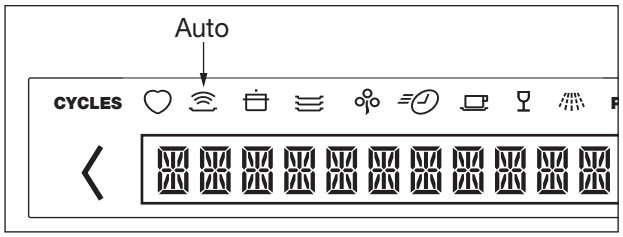

Figure 3-4. Auto Wash Cycle

Normal (See Figure 3-5)

For regularly soiled dishes and silverware. The control automatically selects an assured water temperature of 135°F in the main wash, and 140°F in the final rinse. All options are available to the user. The turbidity sensor is used to detect soil in the water during the wash cycle. Water usage ranges from 4.6 to 8.6 gallons. Wash time ranges between 87 and 113 minutes.

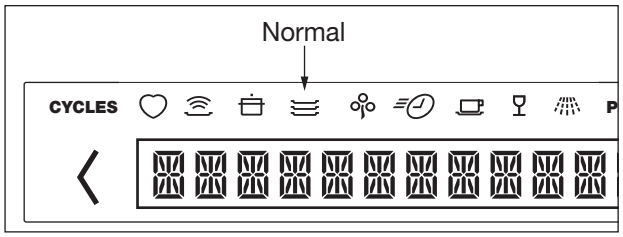

Figure 3-5. Normal Wash Cycle

Heavy (See Figure 3-6)

For pots, pans, casserole dishes and dinnerware with dried-on or baked-on soils. The control automatically selects an assured water temperature of 140°F in the main wash, and 155°F in the final rinse. All options are available to the user. The turbidity sensor is used to detect soil in the water during the wash cycle. Water usage is 9.8 gallons. Wash time is approximately 134 minutes.

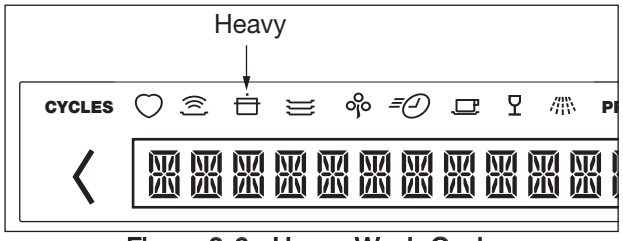

Figure 3-6. Heavy Wash Cycle

Quick (See Figure 3-7)

For lightly soiled and pre-rinsed dishes and silverware. The control automatically selects an assured water temperature of 125°F in the main wash and 128°F in the final rinse. Options available are all dry modes and DELAY start. Water usage is 5.8 gallons. Wash time is approximately 45 minutes.

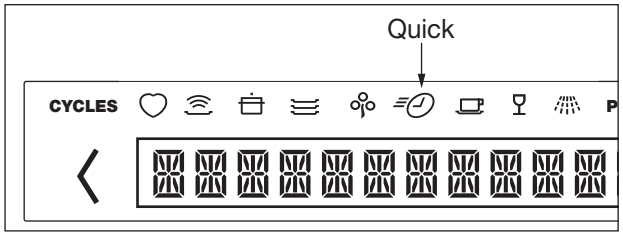

Figure 3-7. Quick Wash Cycle

Eco Wash (See Figure 3-8)

For lightly soiled and pre-rinsed dishes and silverware. The control automatically selects an assured water temperature of 135°F in the main wash, and 140°F in the final rinse. All wash pressure, DRY and DELAY START options are available. No wash temperature options are available. The turbidity sensor is not used during the wash cycle. Water usage ranges from 4.5 to 5.6 gallons. Wash time ranges between 59 and 82 minutes.

NOTE: *Eco Wash is only available in the "A" and "B" electronic controls.*

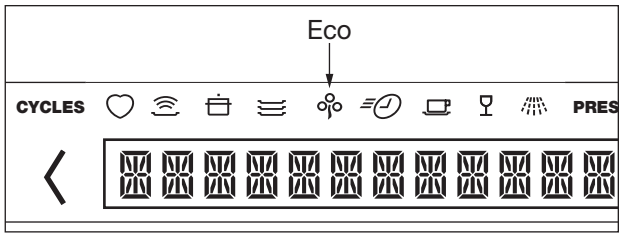

Figure 3-8. Eco Wash Cycle

Stemware or Delicate (See Figure 3-9)

For lightly soiled crystal stemware and delicate china. The control automatically selects an assured water temperature of 130°F in the main wash, and 130°F in the final rinse. Only HEAT DRY and DELAY start options are available.
The turbidity sensor is used to detect soil in the water during the wash cycle. Water usage is 7.2 gallons. Wash time is approximately 87 minutes.

NOTE: *Delicate is only available in the "A" electronic control.*

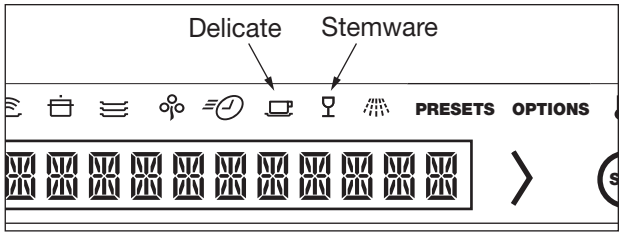

Figure 3-9. Stemware Wash Cycle

Favorite (See Figure 3-10)

This cycle allows you to program your preferred cycle and options into one button. To program the Favorite Cycle:

For the Electrolux **"A"** control, My Favorite cycle is programmed by selecting Favorite cycle (a heart icon) in the user interface, pressing SET, and by using the left or right arrow keys until the desired cycle icon is highlighted along with My Favorite, and by pressing the START/CANCEL key to save.

For the Electrolux **"B"** control, My Favorite cycle is programmed by pressing and holding down the favorite cycle key for 3 seconds. When the user has successfully programmed the favorite cycle, the control shall flash the following LEDs for 2 seconds: Time remaining, My Favorite cycle and the user selected cycle and options. Press the START/CANCEL key to save.

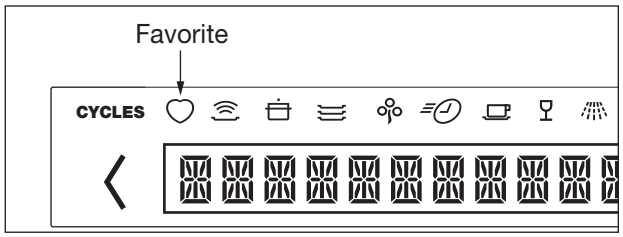

Figure 3-10. Favorite Wash Cycle

For the Electrolux **"C"** control, press and hold the FAVORITE key for 3 seconds. The Favorite key starts to blink, select the Favorite cycles and options (FAVORITE key will remain blinking). Press start to save the Favorite cycles and options that you have chosen. The FAVORITE key remains solid which indicates the settings are saved, all the settings that were chosen are illuminated. Once programmed, simply press the FAVORITE key followed by START/CANCEL to have your programmed Favorite Cycle begin.

Rinse (See Figure 3-11)

For rinsing dishes that will be washed later. No options except DELAY START are available. The turbidity sensor is used to detect soil in the water during the wash cycle. Water usage is 2.8 gallons. Cycle time is approximately 20 minutes.

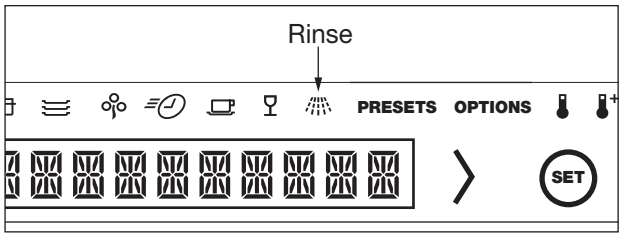

Figure 3-11. Rinse Cycle

Energy Option Selections

Hi-Temp Wash (See Figure 3-12)

When HI-TEMP WASH option is selected, the dishwasher heats water in the main wash to approximately 140°F (60°C).

This increase in water temperature helps the dishwasher detergent remove food, grease and soil from dishes more effectively and aids in drying. HI-TEMP WASH option can be used with all cycles except RINSE.

When HI-TEMP WASH option is selected, the Icon will light up and remain on until end of cycle.
To turn off the HI-TEMP WASH option, press the pad a second time. The light surrounding the pad will turn off.

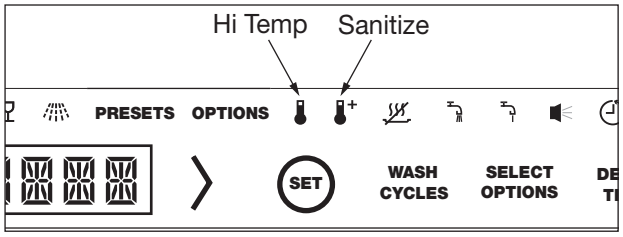

Figure 3-12. Hi-Temp and Sanitize Option

Sanitize (See Figure 3-12)

To sanitize your dishes and glassware, select SANITIZE option. When selected, the light surrounding the pad will remain lit until the START/CANCEL pad is pressed or the door is closed. This option heats the water temperature in the final rinse to 155°F (68°C) and maintains that temperature for 9 minutes. SANITIZE is available in Auto, Heavy, Stemware and Normal cycles. Only these sanitization cycles have been designed to meet NSF requirements.

The cycle time will be extended until the proper water temperature is reached. Washing action will continue during the water heating delay. For best results, the incoming water temperature should be at least 120°F (49°C).

The light surrounding the pad will not illuminate at the end of the cycle if the NSF requirements for sanitization are not reached. The sanitization criteria may not be satisfied if there is an interruption of the cycle, a power failure occurs, or if the incoming water temperature is below 120°F (49°C).

To turn off the SANITIZE option, press the pad a second time. The light surrounding the pad will turn off.

High Wash Pressure (See Figure 3-13)

The high pressure wash option is only available on the “A” electronic control. This feature substitutes the maximum RPM (3400RPM) for the wash table’s RPMs.

Low Wash Pressure (See Figure 3-14)

The high pressure wash option is only available on the “A” electronic control. This feature substitutes the minimum RPM (2800RPM) for the wash table’s RPMs.

Air Dry (See Figure 3-15)

This function disables the fans during the Dry Cycle and is considered an energy saving mode.

Delay Time (See Figure 3-16)

The DELAY TIME option allows you to delay starting your dishwasher from 1 to 24 hours, which varies by model. Press the DELAY TIME pad until the desired delay time shows in the STATUS window. A light will come on indicating the delay start hours and will remain on until cycle starts.

To cancel the DELAY TIME option and begin the cycle before the delay period is over, press the START/CANCEL pad.

Start/Cancel (See Figure 3-17)

To start a cycle, press the START/CANCEL pad once and close the door. To cancel when a cycle is running, open the door and press the START/CANCEL pad once. Close the door again and the dishwasher will drain and shut off.

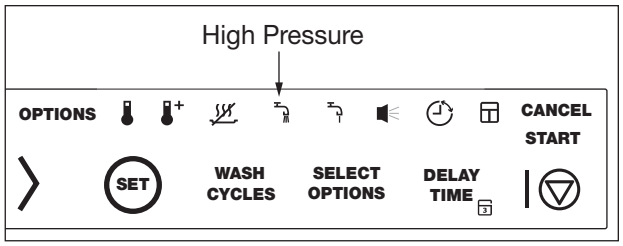

Figure 3-13. High Pressure Wash

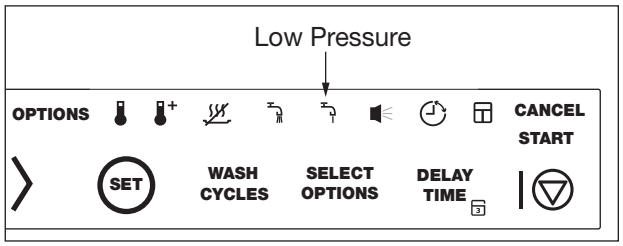

Figure 3-14. Low Pressure Wash

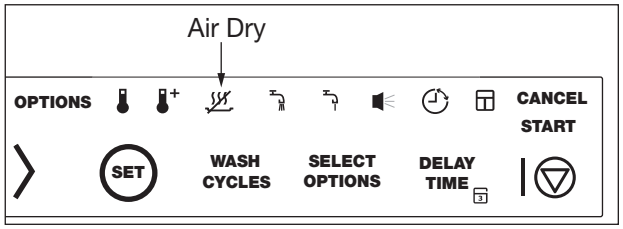

Figure 3-15. Cycle Start/Cancel

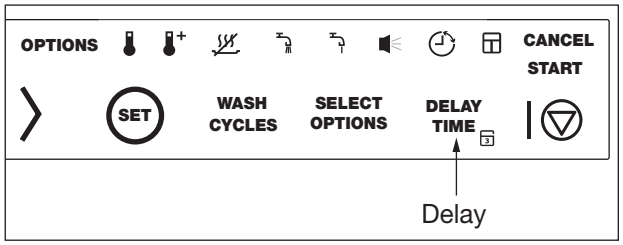

Figure 3-16. Delay Cycle Start

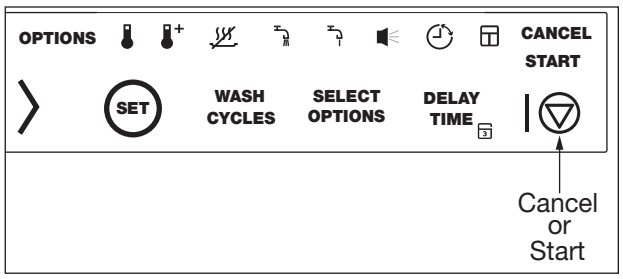

Figure 3-17. Cycle Start/Cancel

Status Window

NOTE: Not available on models without a digital display.

The STATUS window displays codes typically seen during normal operation or programming of the dishwasher. The window will not display anything when the door is closed. The STATUS window indicates the following activity:

For the Electrolux "A" model control (See Figure 3-18)

1. The Electrolux A model control will select OFF, 30, 60 and 90 minutes sequentially, followed by 2 – 24 hours for the delay start option.
2. "CL" Flashes once the program has been entered and the START/CANCEL pad is pressed. It also flashes if the door is opened during a wash cycle. Close the dishwasher door to begin or continue a wash cycle.
3. "HD" Flashes to indicate a water heat delay.
4. "PF" Appears in window when dishwasher is first installed, or when power has been interrupted. HI-TEMP WASH, SANITIZE and START/CANCEL backlighting will also flash. To clear, touch START/CANCEL pad.

For the Electrolux "B" model control (See Figure 3-19)

1. "1-24" Indicates number of delay start hours for selected cycle.
2. "CL" Flashes once the program has been entered and the START/CANCEL pad is pressed. It also flashes if the door is opened during a wash cycle. Close the dishwasher door to begin or continue a wash cycle.
3. "HD" Flashes to indicate a water heat delay.
4. "PF" Appears in window when dishwasher is first installed, or when power has been interrupted. HI-TEMP WASH, SANITIZE and START/CANCEL backlighting will also flash. To clear, touch START/CANCEL pad.

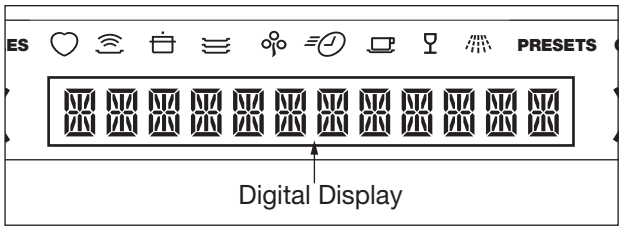

Figure 3-18. Status Window "A" Control

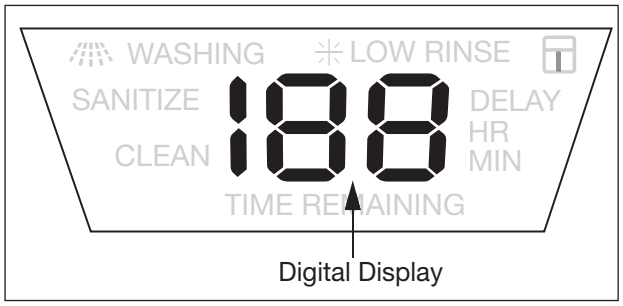

Figure 3-19. Status Window "B" Control

Locking the Control (See Figure 3-20)

The controls locked feature disables the keyboard but does not interfere with any cycle in process. The controls may be locked or unlocked by pressing the AIR DRY button for 3 seconds when the door is latched. The CONTROLS LOCKED LED is illuminated only when the control is locked.

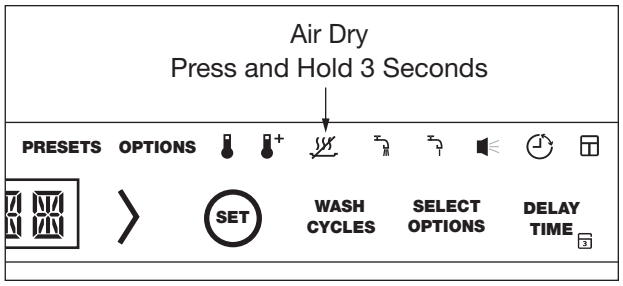

Figure 3-20. Locking the Control

Disable Display (See Figure 3-21)

The display off feature is activated by pressing and holding the left arrow for 10 seconds. DISPLAY OFF will appear in the display for 2 seconds. The display will become blank until the display is enabled again.

The display can be reactivated by pressing and holding the left arrow for 10 seconds. DISPLAY ON will appear for 2 seconds. The last wash cycle used will then be displayed.

If the display is turned off after starting a wash cycle, the wash cycle will run and the end of cycle, the floor LED will shine on the floor for 2 hours. The floor LED will not turn on until the drying cycle is completed in this mode. The floor LED does not turn off when the door is opened, but remains on until the 2 hours is completed.

Figure 3-21. Disable Display

Dishwasher Control

The control is a component made up of two parts: one part is the electronic control itself mounted in the front of the cabinet base behind the toe kick and the second is the keypad, or user interface, located in the console on top of the door. Power to operate the control comes directly from the junction box. All of the switches and component relays mounted on the control are powered by a 12VAC transformer. The control is the power source for all of the electrical components in the dishwasher.

The control operates the dishwasher to complete the selected wash cycle by receiving input information from sensors and by recording the current draw of the major operating components.

Once the cycle starts the control can:

1. Shorten or lengthen the selected cycle.
2. Adjust the cycle for water temperature.
3. Vary the speed of the wash motor as needed.

For these reasons, cycle times will vary from load to load.

As the control monitors the current draw of components there are also sensors and switches providing information to the control throughout the cycle.

1. The turbidity sensor, located in the sump, provides information to the control as to the turbidity of the water. The control will then determine if extra fills are needed to improve cleaning.
2. A thermistor provides the control with the temperature of the water.
3. A flood sensor mounted in the base cover, provides a warning alert in case of a water leak under the dishwasher.
4. The door switch signals the control that the door is closed and the dishwasher can be safely operated.
5. The float switch opens the water valve solenoid in case the tub over fills.

The data collected by the control while in operation, allows the control to help diagnose major component failures if they occur.

To assist in diagnosing the control system, LED lights on the front cover of the control housing will light to indicate when the control senses a failure or detects a problem in the unit. The control can also display a failure code on the console as an alert to a problem. Test cycles are programmed into the control for service technicians to troubleshoot and diagnose problems.

NOTE: *Due to the lack of a numeric display, the C model will flash all its LEDs when an error is detected.*

Error Code Table for Models EWDW6505G & EIDW6305G

Model	Error Code Shown in Display or Read Out	Error Type	Reason
EWDW6505G	Error 1	Leak Detector	Water has been detected under the tub.
EIDW6305G	Alternating “Er” & “01”		
EWDW6505G	Error 2	Thermistor	When thermistor/ turbidity module fails.
EIDW6305G	Alternating “Er” & “02”		
EWDW6505G	Error 3	Wash Pump	Dead wash motor.
EIDW6305G	Alternating “Er” & “03”		
EWDW6505G	Error 4	Drying Damper	Dead drying damper.
EIDW6305G	Alternating “Er” & “04”		
EWDW6505G	Error 5	Upper Fan	The control has not received the proper fan speed feedback from the upper fan.
EIDW6305G	Alternating “Er” & “05”		
EWDW6505G	Error 6	Lower Fan	The control has not received the proper fan speed feedback from the lower fan.
EIDW6305G	Alternating “Er” & “06”		
EWDW6505G	Error 7	Drain Valve	In drain mode, the control has not received proper position feedback from drain valve.
EIDW6305G	Alternating “Er” & “07”		
EWDW6505G	Error 8	Tactile or Touch Switch	Control has verified a switch on user interface is bad or shorted.
EIDW6305G	Alternating “Er” & “08”		
EWDW6505G	Error 9	Communications	A communication failure between the user board and the power supply or main control.
EIDW6305G	Alternating “Er” & “09”		
EWDW6505G	Error 10	Main Relay	Failure in the main power relay.
EIDW6305G	Alternating “Er” & “10”		
EWDW6505G	Error 11	Drain Valve	Time out before finding a state for the drain valve.
EIDW6305G	Alternating “Er” & “11”		
EWDW6505G	Error 12	Drain Valve	The drain valve is running when it should be off this could be a shorted component.
EIDW6305G	Alternating “Er” & “12”		
EWDW6505G	Error 13	System Failure	The control has lost control of the unit.
EIDW6305G	Alternating “Er” & “13”		

Engineering Tests

"A" Control

The following tests are available and may be entered from a power up or power reset mode.

To Enter engineering tests, press "Set" and "Delay Start" simultaneously. Use "<" and ">" to scroll to the desired test, then press "Set" to start the test. Press the "START/CANCEL" key to exit.
The following is the menu of the engineering tests.

Water/Turbidity
Cont- Heavy Wash
Cont- Normal Wash
Cont- Short Wash
Relay Test
C-Relay Test
Software I.D.
UI - Errors
Power Errors

Display Water Temperature and Turbidity Voltages Test Mode

Simultaneously hold the "Delay Time" and "Set" keys during power-up. When "Water Turbidity" is displayed, press 'Set' and select a Wash Cycle, press START/CANCEL and close door. The digital display shows the water temperature in °F and the static and dynamic turbidity readings in volts.

An open sensor will read 3.8 Volts and a shorted sensor, 0 Volts.

To cancel, press "Start/Cancel" key, unit will drain, open door and press simultaneously "Delay Time" and "Set" keys.

Continuous Wash Mode

This test was developed to run in the reliability labs for relays life tests. Simultaneously hold the "Delay Time" and "Set" keys during power-up to enter diagnostics. Use the arrow keys to scroll to the Cont-S Wash test. The display will show data for the Wash Mode selected. Run continuous wash cycle repeatedly according to the Wash Tables. Press the "START/CANCEL" key to exit.

Discrete Relay/Triac and Sensor Test

To enter this mode, press the "Delay Time" and "Set" keys simultaneously. The dishwasher enters a program for all control tests, press one of the arrows to either side of the display until the Relay/Triac test reads in the display. Press the "Set" key to select the test. Once in the Relay/Triac test, pressing the arrows selects the component to be tested. To start the test, press the "Set" key. When the test is complete, press the "Set" key to end the test. To exit the Relay/Triac test, press and hold the "Set" key, this will reset the control and "WELCOME" scrolls across the readout.

C-Relay Test

To enter this mode the "Delay Time" and "Set" keys will be used. Selection of the Relay Test will be done by using the ">" or "<" keys to page and the "Set" key to select this test. This mode may be exited by resetting the machine.

Software Version

Simultaneously hold the "Delay Time" and "Set" keys and then select the software ID test option. The software version numbers of the user interface, the baseboard, and the wash table's will alternate on the display.

Water Service Test - From Idle Mode

Simultaneously press the "Wash Cycles" & "Delay Time" keys for three seconds. Press the "Set" key and close door to run the water service test.

Acceptance Tests

To Enter press "<" and ">" simultaneously.
Use "<" and ">" to select the desired test.
Press "Set" to Start test.

To setup the next test run:
Select Desired Test
Press "Start"
Disconnect power from unit.

"B", "C" and Panel Ready Control

To Enter engineering tests, press "Sanitize" and "Delay Start" simultaneously – "Et" is displayed in the display.

Press "Heavy" for Long Cont Wash Test – "Lt" in display
Press "Normal" for Normal Cont Wash Test – " t" in display
Press "Quick" for Short Cont Wash Test – "St" in display
Press "Rinse Only" for Relay Test Mode – "rt" in display
Press "Favorite" for Heater - LED On/Off

NOTE: *When checking the heater always fill tub with water.*

Press "Auto Sense" for Wash Pump - LED On/Off
Press "Heavy" for Water Valve - LED On/Off
Press "Normal" for Drain Motor - LED On/Off
Press "Quick" for Drain Valve - LED On/Off
Press "Rinse Only" for Clean LED - LED On/Off
Press "Hi Temp" for sequencing through diagnostic LEDs on baseboard.
Press "Sanitize" to toggle fan state
Press "Air Dry" for Dispenser - LED On/Off
Press "Delay Start" to Display Software versions.
Display will cycle thru UIB Rev
Wash table Rev
Power Board Rev
Repeat

Discrete Relay/Triac and Sensor Test

The Relay/Triac and Sensor test mode allows the service technician to energize or sense the appropriate loads in the unit independently of one another.

To access the Relay/Triac and Sensor test, power on or power on reset the machine and within 15 seconds hold simultaneously the "Sanitize" and "Delay". When "Et" is displayed, press "Rinse Only" key, machine will display "rt".

Display Water Temperature and Turbidity Voltages Test Mode

"B" Control

To activate this test, open the door, select any cycle with the exception of My Favorite, press the "Start/Cancel" key, press and hold for 3 seconds the key for the same cycle selected before. Close the door for the control to display the turbidity voltage in the two-digit display as a decimal value. To terminate this test, power up or reset the unit.

Continuous Wash Mode

"B" Control

This test was developed to run in the reliability labs for relays life tests. Simultaneously hold the "Delay Time" and "Set" keys during power-up to enter
diagnostics. Use the arrow keys to scroll to the Cont-S Wash test. The display will show data for the Wash Mode selected. Run continuous wash cycle repeatedly according to the Wash Tables. Press the "Sanitize" and "Delay" keys to exit.

Software Version

Simultaneously hold the "Delay" and "Sanitize" keys. Then after the display shows Et (or Engineering Test), press the "Delay" key to enter the alternate display mode which shows the software IDs.
The software version numbers of the user interface, the baseboard, and the wash table's will alternate on the display.

Water/Service Test - From Idle Mode

Simultaneously press the "Heavy" key (B & C models) and the START / CANCEL keys for three seconds. Press the "Favorite" key; close the door then press "Start/Cancel" to run the water service test.

Acceptance Test

To Enter press "Favorite" & "Auto Wash" together.
Press "Heavy" for Dry Function – "dF" in display
Press "Normal" for Water Loop – "LL" in display
Press "Quick" for Wet Test – "tt" in display
Press "Rinse Only" for Drain valve – "rr" in display
Unit will start test immediately.

Demo Mode

For Electrolux "A" Control Activating Demo Mode:

Prior to initiating Demo Mode

1. Remove Toe and Kickplate with a #2 Phillips screwdriver.
2. Remove cover to the junction box with a #15 Torx bit.
3. Install the provided Romex Connector in the junction box. Connect white/white, black/black and green/green.
4. Replace the junction box cover.
5. Connect the drain hose to the back of the unit. Use the cork and worm clamp provided to plug the end of the drain hose.
6. Connect power to unit.

Initiating Demo Mode

1. Demo mode is entered by holding the Select Option and Right Arrow keys for 5 seconds (If unable to access Demo menu, holding the "SET" key for 5 seconds will reset the unit and allow access to Demo menu).
2. The Arrow keys scrolls between Control Demo and Sound Demo.
3. Select Control Demo by hitting the "SET" key.
4. Once in Control Demo the "SET" key will turn ON and OFF the Control Demo.
5. Press "SET" to turn ON the Control Demo.
6. All outputs are shut off except the user inter face, door latch and blue end-of-cycle floor beam/indicator.

The display will flash "Control Demo" indicating that you are in the Control Demo mode.

NOTE: *"Control Demo" refers to control demo mode so that service technician knows to deactivate the demo mode instead of replacing the control if the unit reaches a consumer's home with demo mode activated.*

7. Press and hold the Select Option and Right Arrow keys for 5 seconds.

Welcome is displayed and control is activated to select cycles, options, delay start, settings etc.

NOTE: *The user interface selections operate as normal. The exception is that when the user presses the start key, there is no prompt given to close the door. Instead the display will flash Washing (2 seconds), Drying (2 sec) and Clean (2 sec). When Clean is displayed, the blue beam will cycle on and remain active for 10 seconds. If the user presses start or closes the door, then all activation resets and control returns to step 3. If delay start is selected, then the display counts down in 1 second intervals from the delay time selected (e.g. 4 hours would be 4, 3, 2, 1 in 1 second intervals washing, drying, clean in two second intervals).*

8. After the control demo is activated, the user interface will default to step 3 each time the door is opened, until the demo mode is deactivated. If any key is pressed, the control defaults to step 3.
9. If a power failure occurs, the unit remains in demo mode. This prevents having to setup all the products in a store setting after a power failure.
10. After 10 seconds of inactivity with the door open, the user interface becomes inactive. To reactivate, simply press any key.
11. If the user wishes to just watch the control demo at any time without selecting cycles, options, etc. then the control can be activated by pressing the start key. The start key memory should be active to repeat the last setting selected, and follow with the drying, clean and blue beam.
12. Arrow to the Control DEMO ON option in the demo menu. Press SET to turn OFF the demo feature. Control DEMO OFF will be displayed. At this time, all outputs are operational.
13. To exit and return to normal operation, press and hold Select Option and Right Arrow keys for 5 seconds.

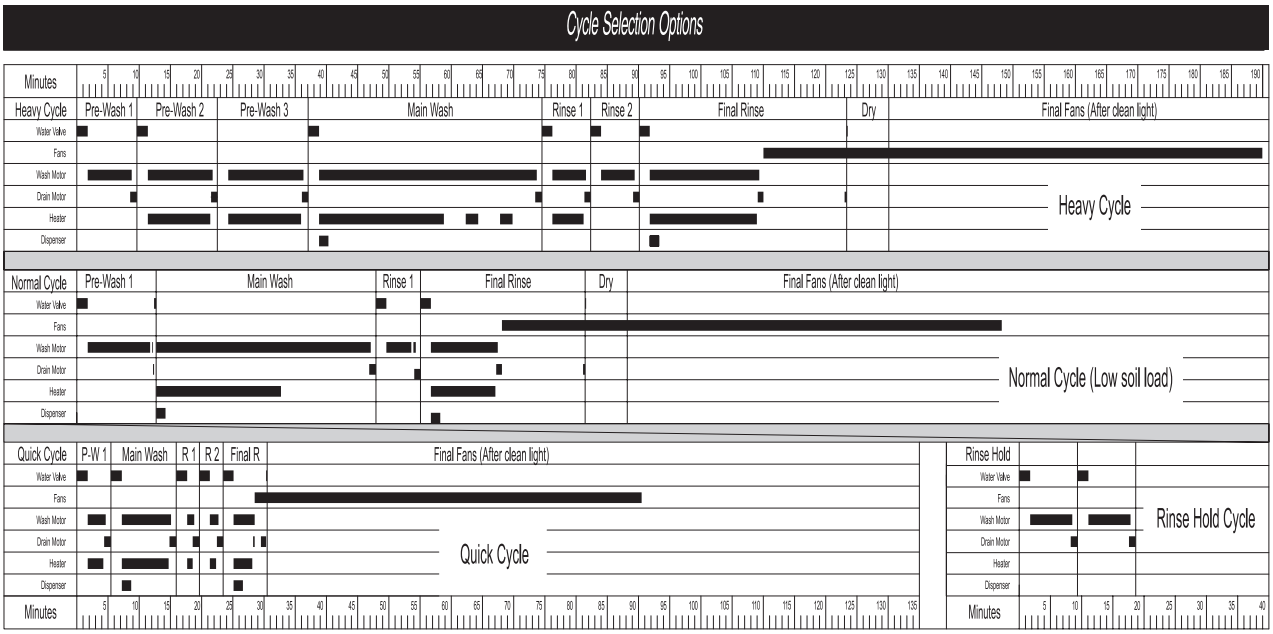

Figure 3-22. Wash Cycle Chart

Section 4

Component Teardown

COMPONENT TEARDOWN

This section explains how to access and remove components from an Electrolux Built-In Dishwasher, and has been arranged in such a way as to simulate which components would need to be removed first in order to gain access to other components. When following a component removal procedure, it may be necessary to reference another component removal procedure listed earlier in this section.

IMPORTANT NOTE: *Before continuing, please take note of the* ***WARNINGS*** *and* ***CAUTIONS*** *below.*

⚠ WARNING

- IF IT IS NECESSARY TO REMOVE A BUILT-IN DISHWASHER UNIT FROM ITS INSTALLATION, USE PROPER LIFTING TECHNIQUES AS UNITS ARE HEAVY AND COULD FALL RESULTING IN SERIOUS INJURY OR DEATH. PULLING A UNIT FROM ITS INSTALLATION SHOULD ONLY BE PERFORMED BY A TRAINED AUTHORIZED SERVICE TECHNICIAN OR INSTALLER.
- TO AVOID ELECTRIC SHOCK, POWER TO A BUILT-IN DISHWASHER UNIT MUST BE DISCONNECTED WHENEVER ACCESSING AND/OR REMOVING COMPONENTS POWERED BY ELECTRICITY OR COMPONENTS NEAR OTHER ELECTRICAL COMPONENTS.
- AFTER SERVICE IS COMPLETED, BE SURE ALL SAFETY-GROUNDING CIRCUITS ARE COMPLETE, ALL ELECTRICAL CONNECTIONS ARE SECURE, AND ALL ACCESS PANELS ARE IN PLACE.
- IF UNIT WAS USED PRIOR TO SERVICE, THE IN-LINE HEATER ASSEMBLY WILL BE HOT. WEAR PROTECTIVE GLOVES AND THE APPROPRIATE SAFETY GEAR WHEN WORKING WITH HEATING ASSEMBLIES.
- IF REMOVING A DOOR FROM A UNIT, REMEMBER THAT DOORS ARE HEAVY. IF THEY WERE TO FALL, THEY COULD CAUSE SERIOUS PERSONAL INJURY.
- MOTOR CAPACITORS MAY REMAIN ACTIVE AFTER ELECTRICAL POWER IS DISCONNECTED. DISCHARGE CAPACITORS BEFORE SERVICING THE WASH MOTOR.

⚠ CAUTION

- Metal edges may be sharp. Use caution and wear appropriate safety equipment when servicing evaporators and condensers to avoid personal injury.
- If working in the sump area, remember that in-line heaters and tubing may be hot.

Door Components

Kickplate and Toeplate Removal

The kickplate and toe plate are secured with screws to the unit frame under the door assembly.

To remove the kickplate:

1. Remove two (2) screws at front of the kickplate assembly using a #2 Phillips screw driver. (See Figure 5-1)
2. Tilt and pull forward to remove.

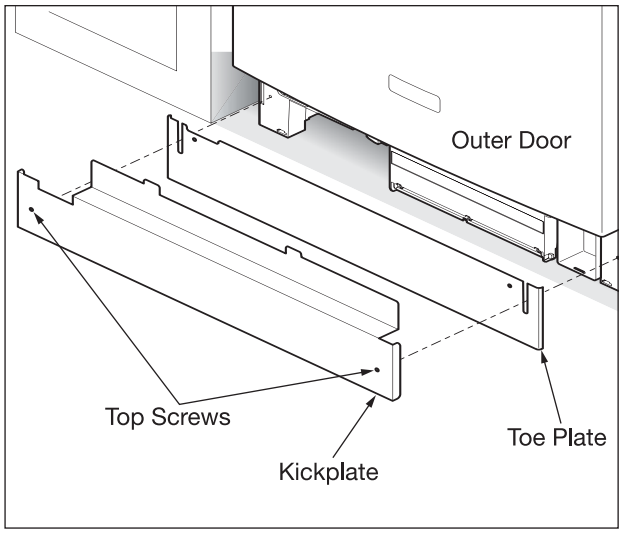

Figure 5-1. Kickplate and Toeplate Removal

Outer Door Panel Removal

In order to access the control, door latch assembly and dispenser, the outer door panel must be removed from the door assembly. Screws pass through the inner door panel and fasten into the outer door panel.

To remove the outer door panel:

1. Open dishwasher door.
2. Extract six (6) screws from outer edge of the door inner panel using a #20 Torx bit screw driver. While extracting the screws, support the outer panel to prevent damage from occurring as the panel drops free. (See Figure 5-2)

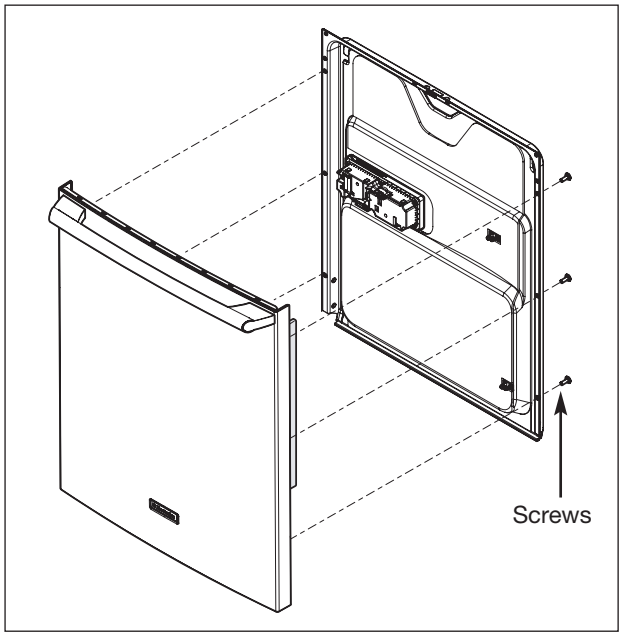

Figure 5-2. Outer Door Panel Removal

Door Handle Removal

The door handle is secured with two phillips heads screws that pass through a support plate and the outer door panel and then fasten into the door handle assembly.

To remove the door handle:

1. Remove the outer door panel.
2. Using a #2 Phillips head screwdriver, extract the two screws securing the door handle to the outer door panel. (See Figure 5-3)

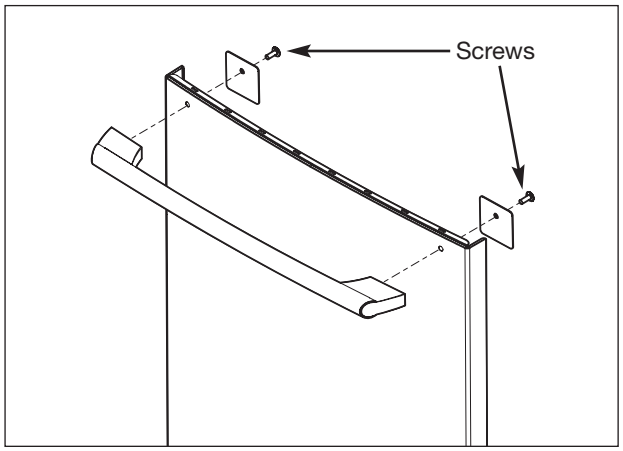

Figure 5-3. Door Handle Removal

Control Panel Assembly Removal

The control panel assembly includes the user interface and the housing it is mounted to. The assembly is secured with four screws to the top of the inner door assembly.

To remove the control assembly:

1. Remove the outer door panel.
2. Extract the two #20 Torx screws screws from the inside of the inner door assembly securing the control panel assembly to the door. (See Figure 5-4) Hold on to the control panel assembly as the screws are removed so the wire harness connections are not strained.
3. Disconnect wire leads from terminals of the control panel. Label as needed to assure proper reconnection.

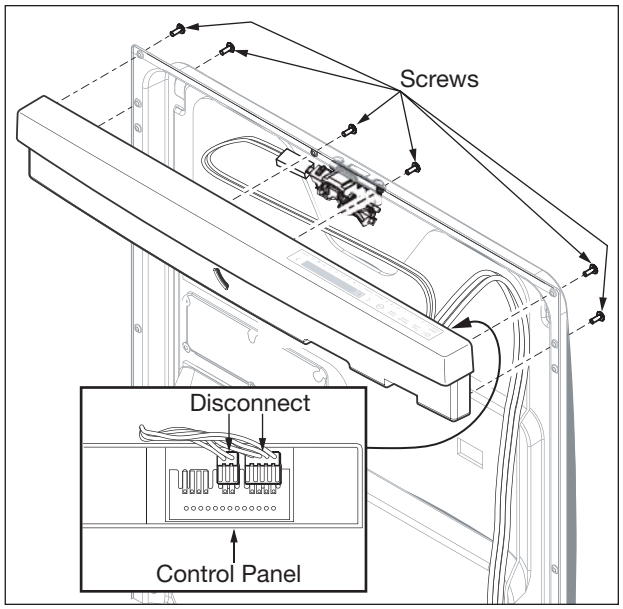

Figure 5-4. Control Panel Assembly Removal

Door Latch Assembly Removal

The door latch is secured with two screws to the inside of the inner door assembly. The wire harness is connected to a microswitch that activates the door latch mechanism.

This dishwasher requires only one door switch, which is a normally open microswitch mounted to the side of the latch body. The switch is closed by an actuator from the latch as the door closes. The door switch closes completing the 12VDC circuit in the control.

If door strike needs to be adjusted, loosen retaining screw in top of tub. This allows the strike to be moved as needed. Tighten retaining screw after adjustment is made. (See Figure 5-6)

Check the opening and closing of the door switch by manually opening and closing the button of the door switch.

To remove the door latch assembly:

1. Remove the outer door panel.
2. Remove the control assembly.
3. Disconnect the wire leads from the door latch assembly terminals. (See Figure 5-5)
4. Extract the two #20 Torx screws securing the door latch assembly to the inner door panel.

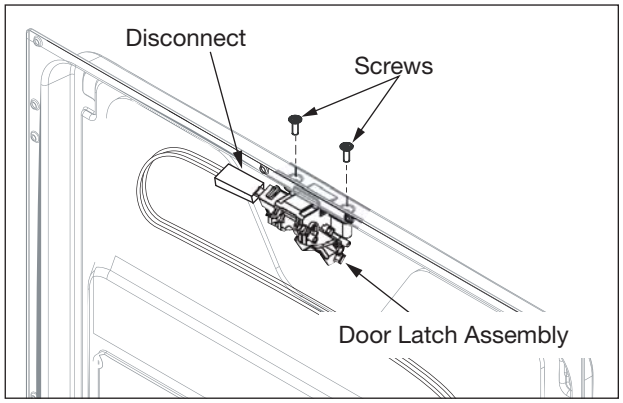

Figure 5-5. Door Latch Assembly Removal

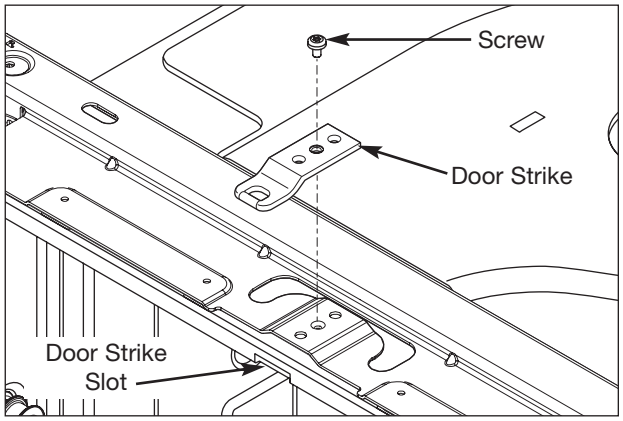

Figure 5-6. Door Strike Removal

Dispenser Assembly Removal

The dispenser assembly is mounted with two retaining brackets to the outside of the inner door assembly and is secured with T-15 Torx screws.

The cover over the larger cup is opened at the proper time by the control. Power from the control energizes the wax motor, extending the actuator from the motor releasing the cover over the cup. As the actuator of the wax motor retracts, the linkage to the rinse aid section of the dispenser shifts for the next actuation of the wax motor. The control powers the wax motor a second time, dispensing rinse aid into the final rinse of the cycle. As the actuator retracts into the wax motor, the linkage resets for the next wash cycle.

To check operation of the dispenser, program the dishwasher into the Relay/Triac test. Program power to the dispenser and time how long it takes the wax motor to extend the linkage and release the cover. After this test has completed set the dishwasher into a Quick wash cycle to check operation of the dispenser. The dispenser should open after the second fill. The ohm reading for the wax motor on the dispenser is 2.38K ohms.

To remove the dispenser assembly:

1. Remove the outer door panel.
2. Remove wire leads from retaining clips around dispenser assembly. Disconnect the wire lead from the terminal of the detergent dispenser located on the left side of dispenser assembly. (See Figure 5-7)
3. Disconnect the wire leads from the terminal of the rinse aid dispenser located on the lower right side of dispenser assembly.
4. Extract the six #15 Torx screws securing the dispenser mounting brackets to the inner door panel. The dispenser assembly is removed by pushing through the inner door assembly.

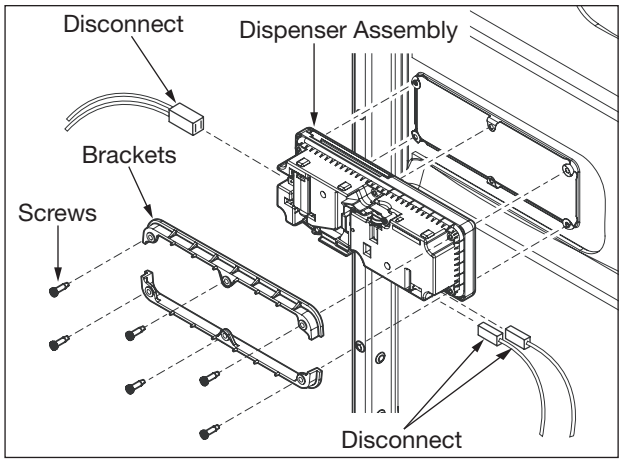

Figure 5-7. Dispenser Assembly Removal

NOTE: The dispenser is mounted to the inside of the inner door assembly. The view above is for illustration purposes.

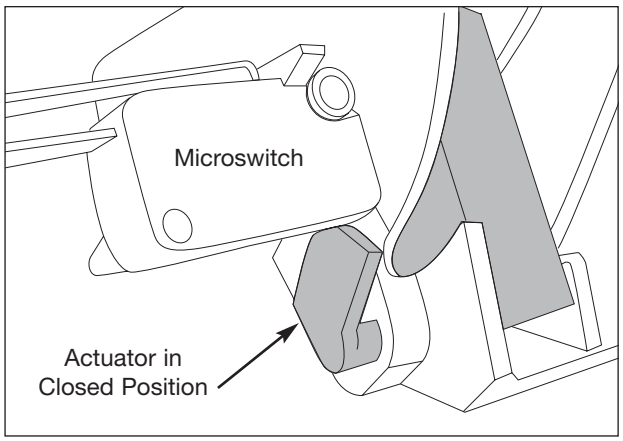

Figure 5-8. Dispenser Actuator

Door Removal

The door assembly is secured with screws to the hinge assembly. The hinge spring linkage must be removed from the hinge assembly before removing the door assembly.

To remove the door assembly:

1. Remove the outer door panel.
2. Disconnect wire leads from the user interface and dispenser assembly. Remove wire harness from wire clips on inner door panel.
3. With a pliers remove the cable of the door spring from hinge assembly. (See Figure 5-9)
4. Open door assembly. Using a #20 Torx bit, extract the 2 screws from each side of the door that secures the door assembly to the hinge assembly. (See Figure 5-10)

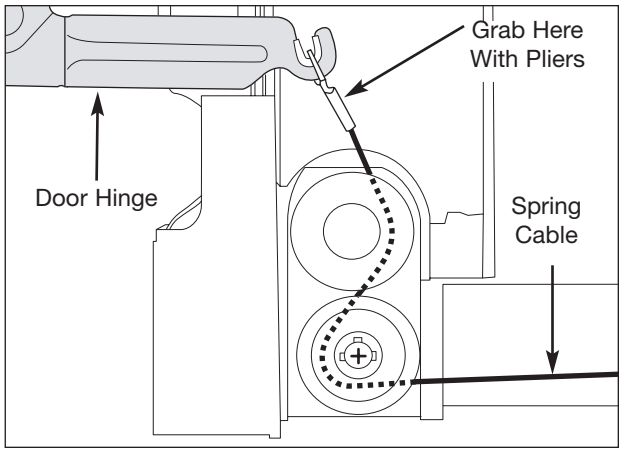

Figure 5-9. Hinge Spring Cable Removal

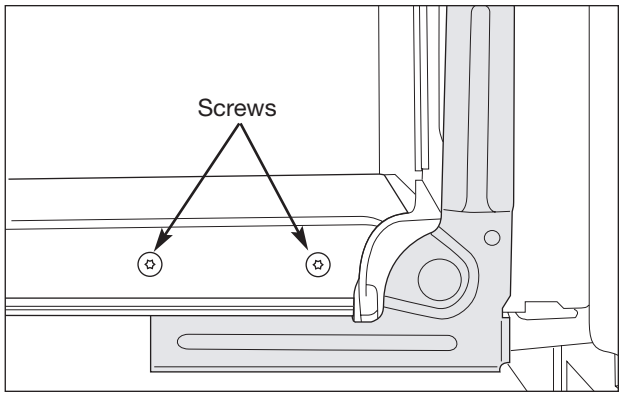

Figure 5-10. Door Removal

Door Seal Removal

The door seal seals the area between the inner door panel and the tub to prevent leaks. There are two seals one mounted onto the bottom of the inner door panel the other pressed into a channel and mounted around the front of the tub.

To install the tub mounted seal, first determine the inside and outside of the seal. The extended end on the seal goes toward the inside of the tub. (See Figure 5-11) Start by finding the center of the gasket and press this into the channel at the door strike. Next take the gasket to the top corners and press into the channel. Continue to the bottom on either side, then work up from the bottom, pressing the seal into the channel, working to the center. Close door and press in place.

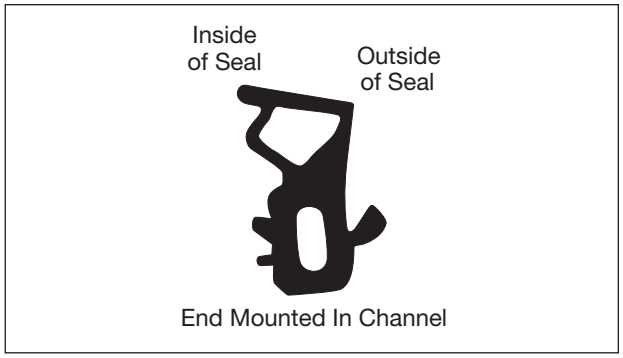

Figure 5-11. Door Seal Removal

Bottom Door Seal

The bottom door seal is located at the bottom of the inner door assembly. The door seal slides under a lip formed in the door assembly and is secured in pace by crimping the outer edge of lip.

To remove the bottom door seal:

1. Remove the outer door panel.
2. Remove toe and kickplate.
3. Remove door from unit.
4. Using a small flat bladed screwdriver or putty knife, pry out the crimped area until the bottom door seal can be removed from door assembly. (See Figure 5-12)
5. When installing, crimp door lip until seal cannot be pulled from the door.

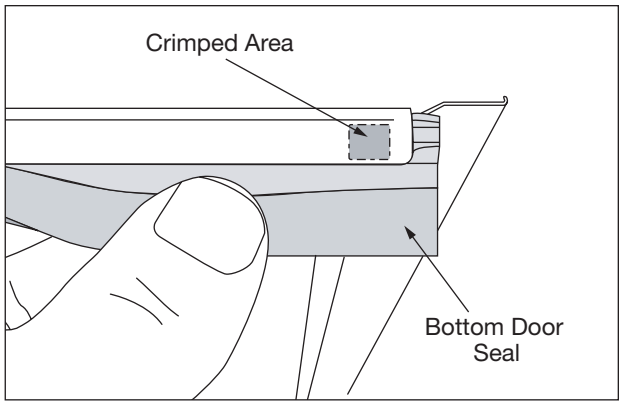

Figure 5-12. Bottom Door Seal Removal

Pulley Assembly Removal

The pulley assemblies are located behind the leg levelers on the exterior of unit. The assembly slides into a slot formed in the frame of the unit.

To remove the pulley assemblies:

1. Remove unit from its installation to access the pulley assemblies.
2. Remove spring tensioned cable from door hinge.
3. Tilt unit back to access the screws along the edge of the unit base. If blocking materials are not available, the unit may be set on its back.
4. Using a #20 Torx bit, extract the two screws securing the pulley assembly to the bottom of the unit frame. (See Figure 5-13)
5. Using a phillips head screwdriver, extract the screw passing through the lower pulley. The pulley assembly can then be pulled out of the locating slot.

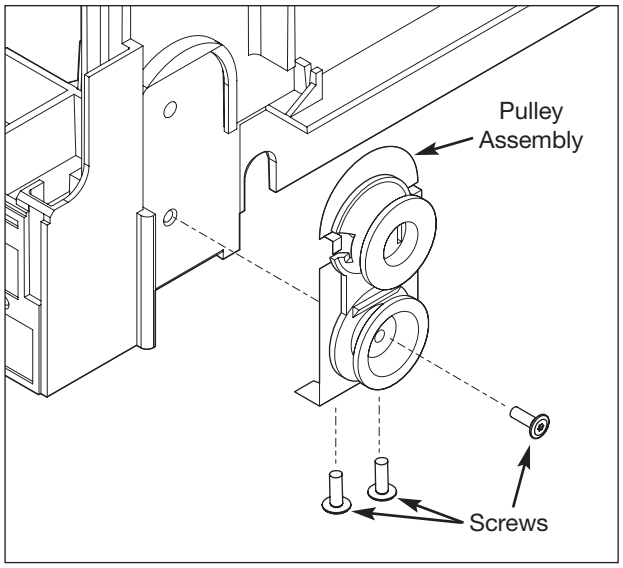

Figure 5-13. Pulley Assembly Removal

Interior Components

Upper and Lower Rack Assembly Removal

The wire racks are all nylon coated, and all models have adjustable upper racks. The models can have different features in the lower rack.

The lower wire rack is removed by simply pulling the lower wire rack out of the tub.

The upper rack assembly is held within the guide rail by an end cap that snaps onto the end of the guide rail. The end cap has molded retaining pins that allow the end caps to rotate off the front of the guide rail and enables the upper rack assembly to be removed from the unit. (See Figure 5-14)

The upper rack adjusters, mounted to the sides of the rack, are adjusted independently of each other. To adjust the rack, press out on the adjustment lever then raise and lower the rack as needed.

To remove the upper rack assembly:

1. Turn end cap towards the outside of the unit until approximately 90 degrees from guide rail.
2. Pull upper rack assembly out of guide rail.
3. The adjustment assembly is removed by extracting the two screws from the inner and two shoulder screws from the outer plates. (See Figure 5-15)
4. Pull the bottom of the spring clamp assembly off of wire rack, then using a #10 Torx bit, extract the screw securing the spring clamp to the adjustment lever. Remove components from wire rack.

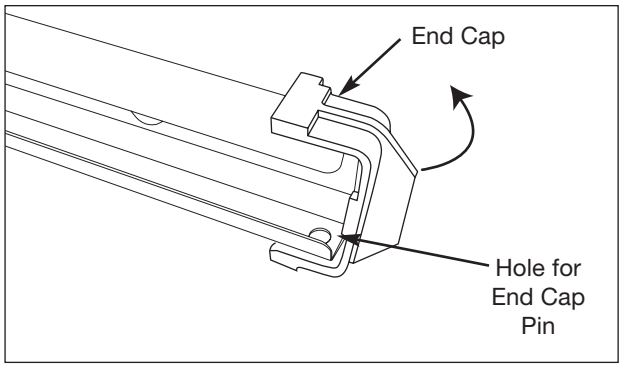

Figure 5-14. Top Basket Removal

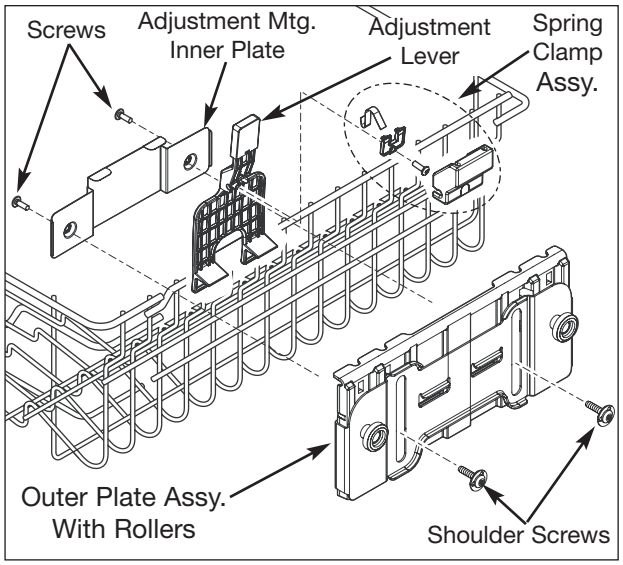

Figure 5-15. Top Basket Removal

Lower Spray Arm

The lower spray arm is removed by grabbing the spray arm in the center and pulling straight up.

Glass Trap Removal

The glass trap is removed from the sump by grabbing the handle and pulling up and out of the sump.

Pressurized Fine Filter Assembly

Water enters the pressurized fine filter assembly from a port recessed into the right end of the volute cover. Water exits through the fine mesh screens down both sides of the filter leaving trapped food particles and grit inside the assembly.

The mesh screens on the sides of the filter are cleaned by lower spray arm. The left end of the filter is recessed into the pump out section of the sump so trapped food particals and grit can be easily pulled from the filter.

To remove the pressurized fine filter:

1. Remove lower spay arm.
2. Using a #20 Torx bit, extract the two screws securing the pressurized fine filter to the spray arm support. Lift pressurized fine filter from stainless steel filter. (See Figure 5-16)

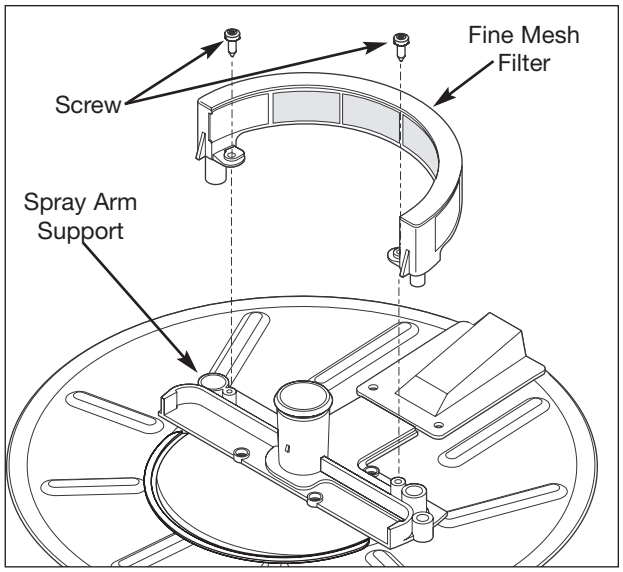

Figure 5-16. Condenser Removal

Center Spray Arm Removal

The center spray arm mounts with a bracket to the upper wire rack. The spray arm assembly passes through the manifold mounting clip and slips into the delivery tube manifold when the upper rack is pushed into the tub. The spray arm is secured to the spray arm assembly with a screw.

To remove the center spray arm:

1. Remove the upper wire rack.
2. Using a #10 Torx bit, extract the screw securing the center spray arm to the spray arm assembly. (See Figure 5-17)
3. The spray arm assembly is separated from the wire rack by lifting up on the retaining latch on the mounting bracket and pushing the spray arm assembly towards the back of the unit until free of the mounting bracket, then pull assembly out of the manifold mounting clip.

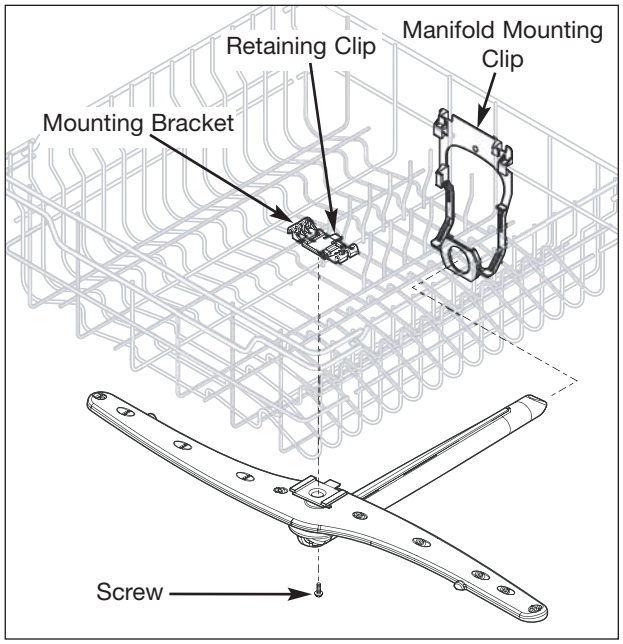

Figure 5-17. Stainless Steel Filter Removal

Vertical Filter Removal

The vertical filter acts as a divider for the sump compartment. A rubber flap acts as a check valve to prevent the filtered water from flowing in the wrong direction. Screws secure the vertical filter to the bottom of the sump.

To remove the vertical filter:

1. Remove the lower wire rack.
2. Remove the lower spray arm.
3. Using a #20 Torx bit, extract the three screws securing the vertical filter to the sump. Pull vertical filter from unit. (See Figure 5-18)

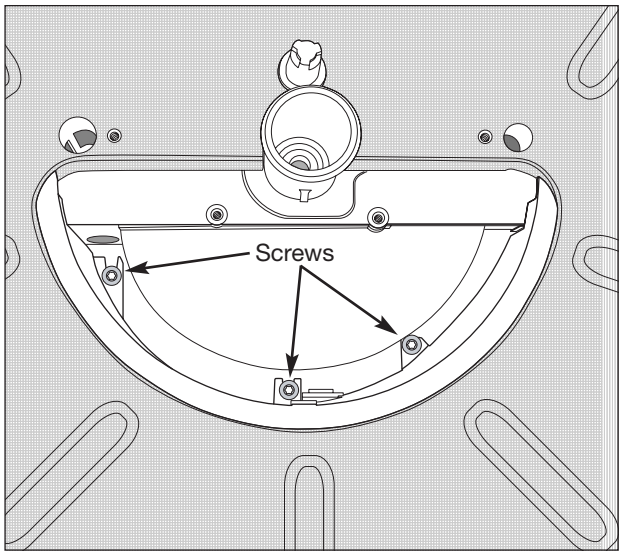

Figure 5-18. Vertical Filter Removal

Stainless Steel Filter Removal

The round stainless steel filter covers the sump then extends over the bottom of the tub, increasing the area used for water filtration. To prevent food from bypassing the filter the outer perimeter of this filter is recessed into the bottom of the tub. The filter is secured with two screws that pass through the plastic cover mounted to the filter, and with retaining latches on the rear of the plastic cover. The plastic cover is part of the stainless steel filter assembly.

To remove the stainless steel filter:

1. Remove the lower wire rack.
2. Remove the lower spray arm.
3. Remove the fine mesh filter.
4. Remove the glass trap and vertical filter.
5. Using a #20 Torx bit, extract the two screws securing the stainless filter and delivery tube cover to the sump. (See Figure 5-19)
6. Using a flat bladed screwdriver, pry out the retaining latches on the plastic cover while pulling the filter up over the delivery tube.

NOTE: *The stainless steel filter can easily be bent out of shape. Use care when removing and reassembling the filter.*

7. Lift filter slightly then push filter toward the back of the tub until the filter is clear of the spray arm support, then lift out of unit.

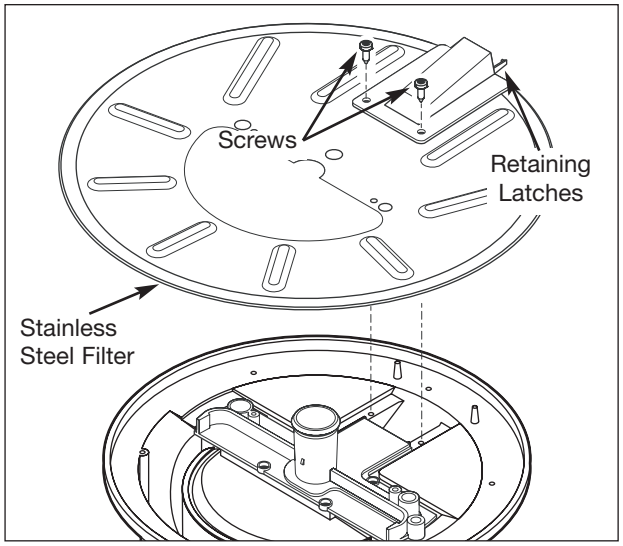

Figure 5-19. Stainless Steel Filter Removal

Delivery Tube Removal

The delivery tube supplies water to the upper two spray arms and is mounted to the tub with two retaining brackets, one on the back wall, the other on the ceiling of the tub. The delivery tube has three openings in the tube that are used for the center spray arm. Each of the openings has a shut off valve that closes when not in use. The top spray arm is mounted directly to the delivery tube with a push in retainer.

To remove the delivery tube: (See Figure 5-20)

1. Remove the upper and lower wire rack.
2. Remove the lower spray arm.
3. Remove the fine mesh filter.
4. Remove the glass trap and vertical filter.
5. Remove the stainless steel filter.
6. Using a #20 Torx bit, extract the two screws securing the delivery tube cover to the sump. Remove delivery tube cover from unit.
6. Using a flat bladed screwdriver, pry out the retaining latches on the delivery tube from the stainless steel mounting clips, one on the back wall and the other on the ceiling of the tub.
7. Push the delivery tube out from its installation position in the sump, then pull out of unit.
8. The nozzle assembly is removed by pressing in the retaining latches while pulling the nozzle assembly out of the delivery tube.

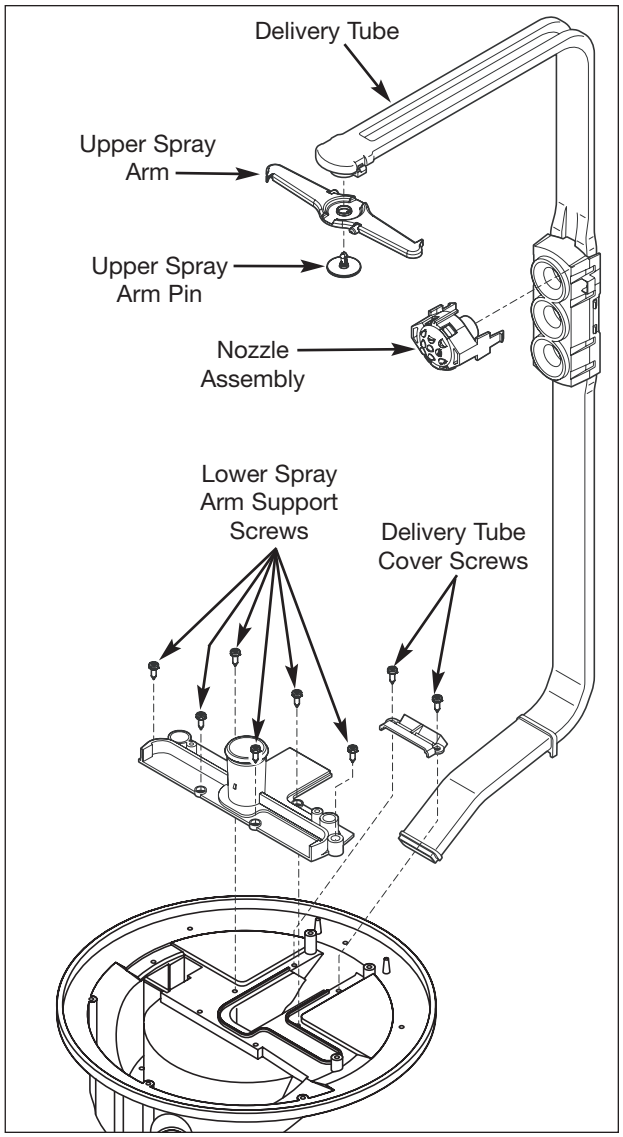

Figure 5-20. Delivery Tube and Lower Spray Arm Support Removal

Lower Spray Arm Support

The lower spray arm support is a dual purpose component. The lower spray arm mounts into the top of the support and a check ball on the left side of the support works with the check valves in the sump to assure that all of the used water is pumped out at the end of the wash cycle.

To remove the lower spray arm support:

1. Remove the upper and lower wire rack.
2. Remove the lower spray arm.
3. Remove the fine mesh filter.
4. Remove the glass trap and vertical filter.
5. Remove the stainless steel filter.
6. Remove the delivery tube cover.
7. Using a #20 Torx bit, extract the six screws securing the lower spray arm support to sump. (See Figure 5-20)
8. Pull lower spray arm support from unit. Use caution not to lose the check ball in the left side of the support.

Check Valve Assembly Removal

The check valve assembly is mounted in a slot on the left side of the sump. A rubber flap acts as a check valve to prevent the unfiltered water from flowing into the delivery tube.

To remove the check valve assembly:

1. Remove the upper and lower wire rack.
2. Remove the lower spray arm.
3. Remove the fine mesh filter.
4. Remove the glass trap and vertical filter.
5. Remove the stainless steel filter.
6. Remove lower spray arm support.
7. Pull the check valve assembly out from slot in sump. (See Figure 5-21)

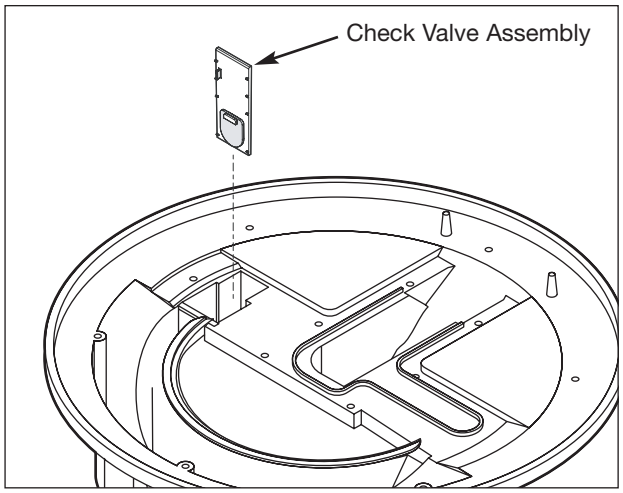

Figure 5-21. Vertical Filter Removal

Upper and Lower Frame Components

Valve Service Cover Removal

The valve service cover is a plastic cover that houses the floor LED and serves as a cover for components mounted to the underside of the unit.

To remove the valve service cover:

1. Remove the outer door panel.
2. Remove toe and kickplate.
3. Using a #20 Torx bit, extract the 4 screws securing the door assembly reinforcement to the door hinge assembly. (See Figure 5-22)
4. Using a #20 Torx bit, extract the 2 screws securing the valve service cover to the unit frame.
5. Pull valve service cover downward and carefully pull away from unit. Use caution not to strain the wire leads of the floor LED.
6. Carefully pull back the insulation covering the access holes of the LED light. Press in on the retaining latches of the LED and remove from valve service cover. (See Figure 5-23)

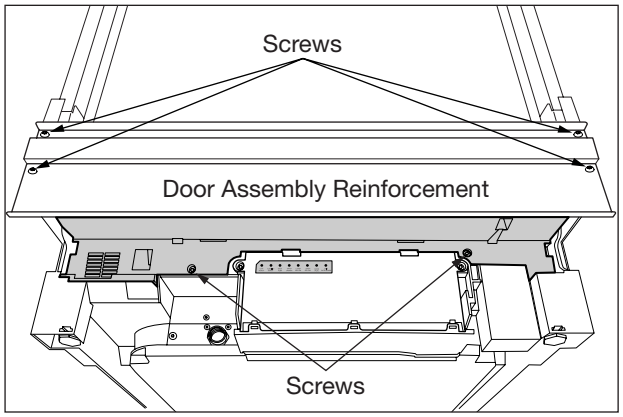

Figure 5-22. Valve Service Cover Removal

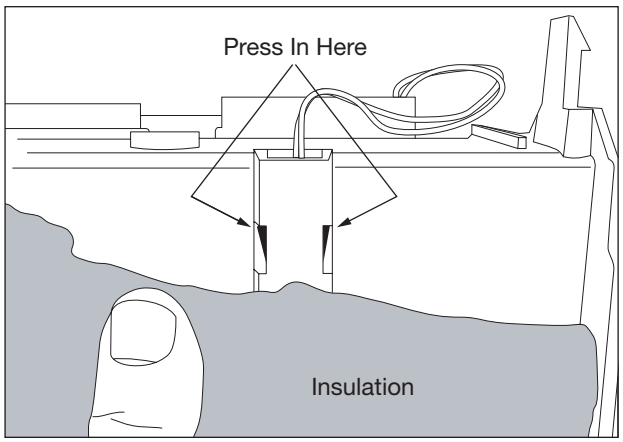

Figure 5-23. Floor Beam LED Removal

Control Assembly Removal

The control assembly is mounted underneath the valve service cover behind the kickplate. To access the wire harness, the control assembly must be removed from its installation position.

To remove the control assembly:

1. Remove the outer door panel.
2. Remove toe and kickplate..
4. Using a #20 Torx bit, extract the 2 screws securing the control assembly to the unit frame. (See Figure 5-24)
5. Release the retaining latches at the top edge of the control assembly. Rotate control assembly away from unit until the rectangular locating pins line up with the slots of the control mounting bracket.
6. Carefully pull control assembly out from slots.
7. Release the retaining latches from the control housing bracket and remove from control assembly.
8. Prior to removing wire leads from control assembly, label as needed to assure proper reconnection.
9. Remove wire leads from control assembly. The circuit board can then be lifted out of the control assembly.

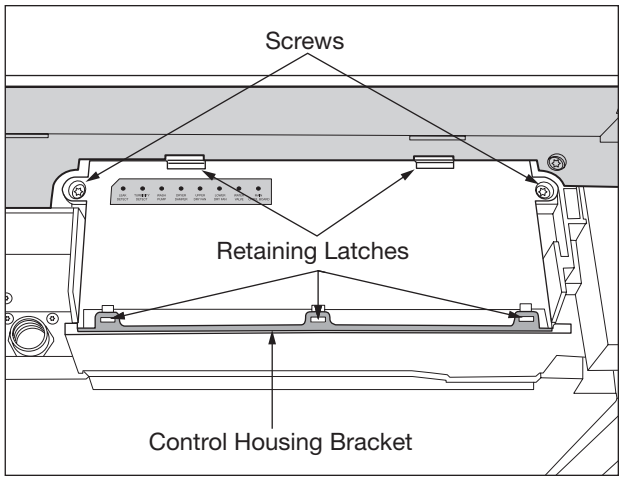

Figure 5-24. Control Assembly Removal

Door Strike Removal

The door strike is mounted to the top of the top frame brace, with the front section slipping through a slot in the unit frame, and secured with a screw. (See Figure 5-25)

If door strike needs to be adjusted, loosen the retaining screw at top of frame brace. This allows strike to be moved as needed. Tighten retaining screw after adjustment is made.

To remove door strike extract the retaining screw and pull door strike from slot in frame.

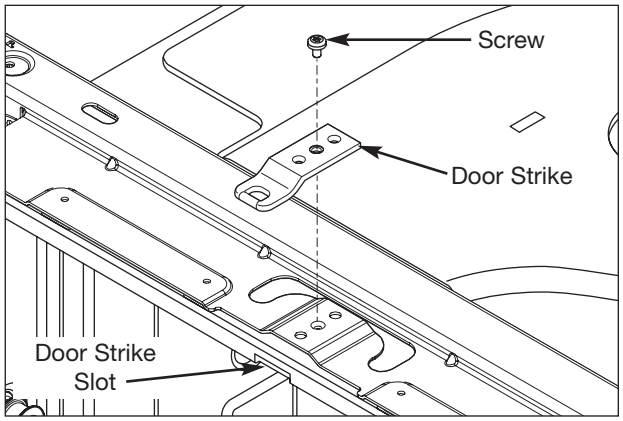

Figure 5-25. Door Strike Removal

Roller Assembly & Guide Rail Removal

The four roller assemblies are mounted to the interior sidewall of the tub. The screws securing the roller assemblies pass through washers, retaining plates and the leg and hinge assembly, before passing through the unit frame and fastening into the roller assemblies.
(See Figure 5-26)

1. Remove unit from its installation position.
2. Remove upper and lower rack assemblies.
3. Using a #20 Torx bit, extract the 2 screws from each retainer plate on the exterior of unit. Use caution when removing the second set of screws as the roller assemblies and guide rail will fall free inside the unit as the screws are removed.

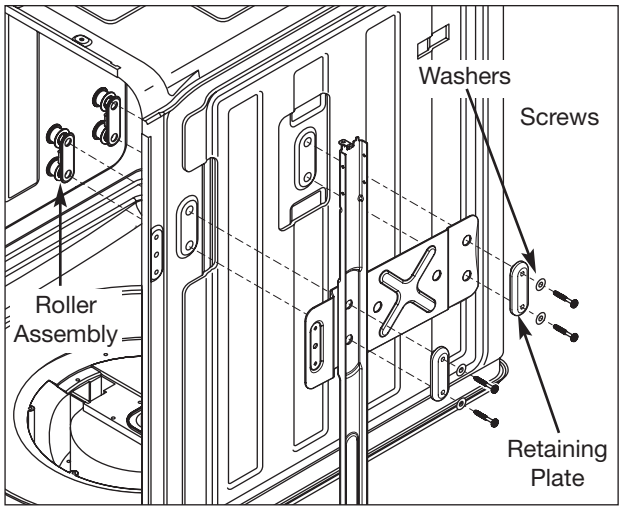

Figure 5-26. Roller Assembly & Guide Rail Removal

Corner Trim and Cabinet Clip Bracket Removal

The corner trim and cabinet clip bracket must be removed prior to removing the top frame brace and the leg and hinge assembly. (See Figure 5-27)

To remove the corner trim and cabinet clip bracket:

1. Remove unit from its installation position.
2. Using a #20 Torx bit, extract screw securing the corner trim to the cabinet clip bracket.
3. The corner trim has a bend along its bottom edge that fits over the unit frame. Rotate corner trim until top portion is free of the cabinet clip bracket, then pull upwards until bent edge clears the unit frame.
3. Using a #20 Torx bit, extract screw from under the cabinet clip bracket. Lift from outside edge until retaining clip is free of unit frame.

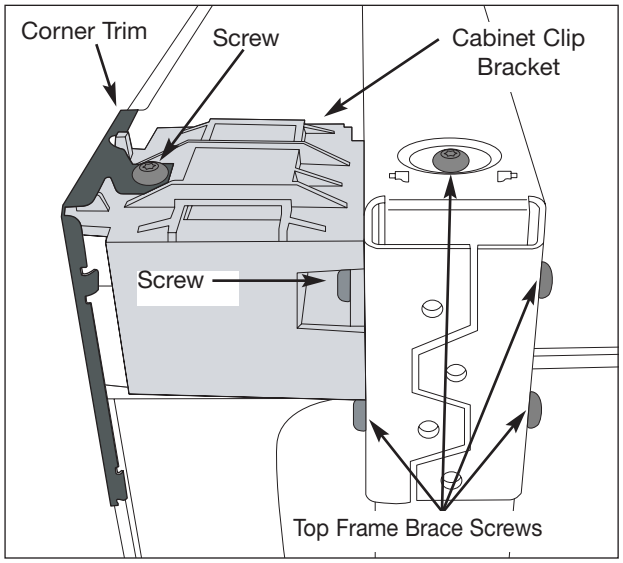

Figure 5-27. Corner Trim and Cabinet Clip Removal

Top Frame Brace Removal

The top frame brace slides over the leg and hinge assembly and is secured with screws. The door strike must be removed prior to removing the top frame brace.

To remove the top frame brace:

1. Remove unit from its installation position.
2. Remove the door strike from top frame brace.
3. Remove the corner trim and cabinet clip bracket.
4. Using a #20 Torx bit, extract the four screws from each end of the top frame brace securing the top frame brace to the leg and hinge assembly. (See Figure 5-27)

Leg and Hinge Assembly Removal

The leg and hinge assembly extends from the top frame brace down into the unit frame where a screw secures the assembly to the unit frame. Screws also pass from the interior of the unit through the side wall and fasten into the leg and hinge assembly.

To remove the leg and hinge assembly:

1. Remove unit from its installation position.
2. Remove the door assembly.
3. Remove upper and lower rack assemblies from interior of unit.
4. Remove the roller assemblies and guide rails.
5. Remove the door strike from top frame brace.
6. Remove the corner trim and cabinet clip bracket.
7. Remove the top frame brace.
8. Using a #20 Torx bit, extract the four screws from each interior sidewall that secure the leg and hinge assembly to the exterior of the unit frame. (See Figure 5-28)
9. Tilt unit back to access the screw inside the unit base. If blocking materials are not available, the unit may be set on its back.
10. Using a #20 Torx bit, extract the screw from the unit base securing the leg and hinge assembly to the unit frame. The leg and hinge assembly may now be pulled out from its installation position. (See Figure 5-29)

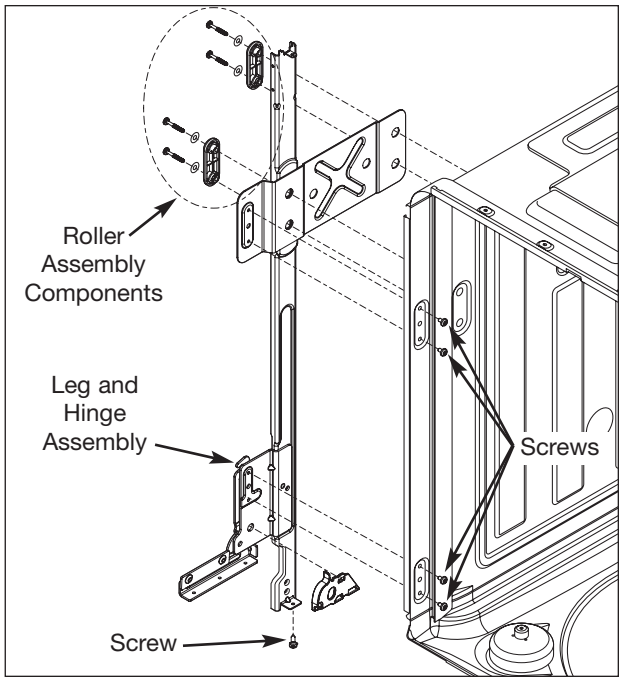

Figure 5-28. Leg and Hinge Assembly Removal

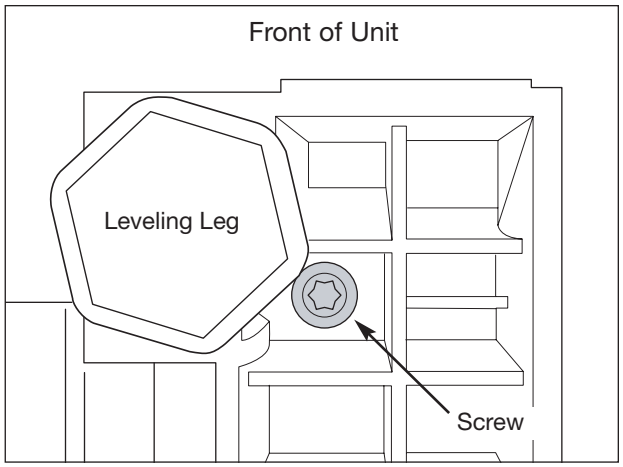

Figure 5-29. Leg and Hinge Assembly Removal Bottom Screw Location

Top Vent & Fan Assembly

The top vent and fan assembly is located in the top right rear corner of the tub. This vent is normally closed, opening in only the dry cycle by the electronic control. The vent is monitored by the control throughout the cycle to insure it stays closed. The vent and fan motor is replaced only as an assembly.

The blower operates with 12VDC with a speed of 3500rpm. This assembly plugs directly into the electronic control. If the control senses a failure in the blower or the vent baffle it will stop the dishwasher and show a failure code.

To remove the top vent and fan assembly:

1. Pull unit from its installation position.
2. Disconnect the electrical leads from wire harness on exterior of unit.
2. Remove the top wire rack.
3. Reach inside tub, turn retaining nut clockwise until retaining nut falls from the top vent assembly. (See Figure 5-30)

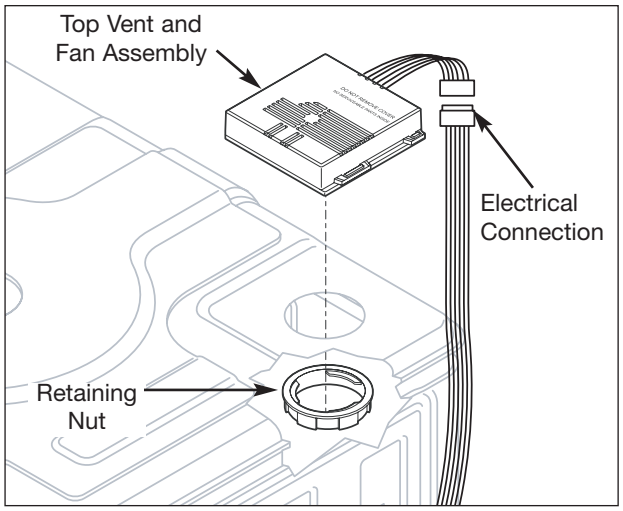

Figure 5-30. Top Vent & Fan Assembly

Water Valve Removal

The water valve mounts to the front left side of the control assembly and is accessed by removing the kickplate. The water valve is wired directly to the electronic control and operates on 120VAC. All cycle fills on this dishwasher are time fills, which are regulated by a flow restrictor in the valve body. The flow rate of this valve is .83gpm with the incoming water pressure from between 20 to 120psi.

To remove the water valve:

1. Remove kickplate.
2. Make sure household water supply is turned off. Disconnect the water supply line from the front of the water valve. Have a towel under the water valve to absorb water leaking out of the supply line and unit.
3. Using a #20 Torx bit, extract the screw securing the small access cover to the valve mounting bracket.
4. Using a #20 Torx bit, extract the two screws securing the valve mounting bracket to the unit frame. (See Figure 5-31)
5. Pull water valve forward to remove wires from solenoid.The solenoid resistance is 1000ohms.
6. Using a pliers, remove tubing clamp from water line exiting valve.

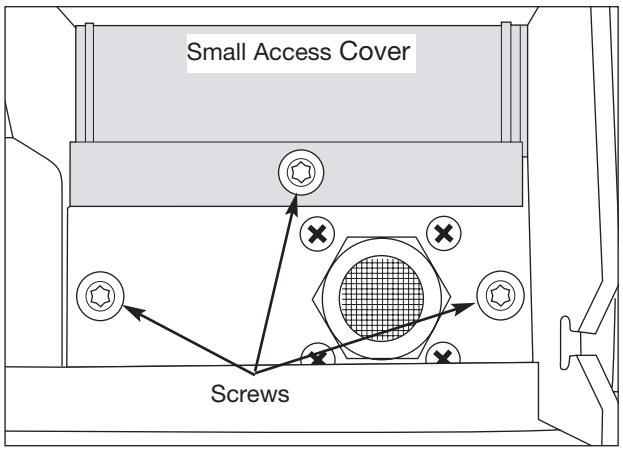

Figure 5-31. Water Valve Removal

Float Switch Removal

The float switch is a safety switch that in the event an overfill, the switch opens the circuit to the water valve relay mounted on the electronic control. The float switch is located under the tub in the left front corner. This switch is a normally open microswitch that closes when the float inside the tub is in place. The switch can be checked for continuity at the electronic control and is checked for operation by raising and lowering the float from inside tub.

To remove the float switch:

1. Remove unit from its installation position.
2. Remove lower rack assembly.
3. Remove kickplate and valve service cover.
4. Pull top section of float from float assembly.
5. Using a 15/16” socket or wrench, remove the plastic retaining nut from the float switch assembly. (See Figure 5-32)
6. From under the tub compartment, disconnect the electrical leads from the float switch terminals.
7. Pull float switch out of hole in tub. The switch is sealed to the tub in order to stay water tight and may be difficult to initially break the bond.
8. When reinstalling, apply adhesive to float switch to prevent leakage.

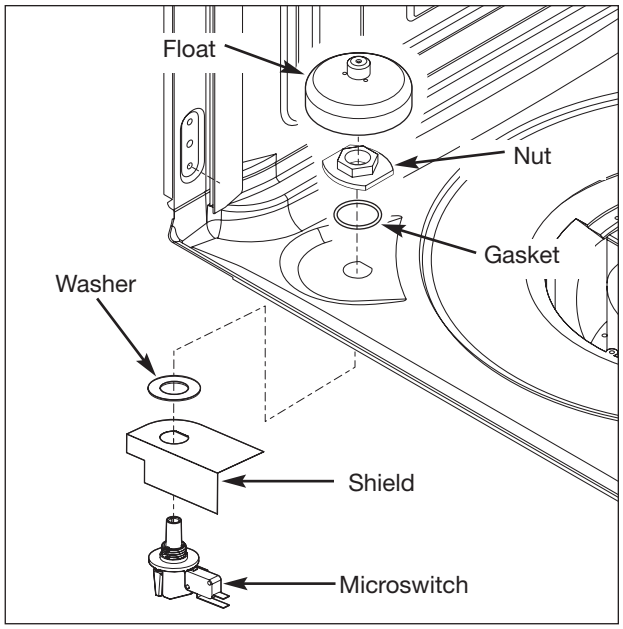

Figure 5-32. Float Switch Removal

Side Vent Removal

The side air duct serves a dual purpose. It provides a fill nozzle for water entering the dishwasher and as a duct to direct air and steam from the tub in the dry cycle. The duct is mounted to the left side of the tub and held in place by the water inlet cover inside the tub.

To remove the side vent:

1. Pull unit from its installation position.
2. Remove the lower wire rack.
3. Use a pliers to remove the spring clamp from the tubing connected to the side vent drain tube. (See Figure 5-33)
4. From inside the tub, turn the water inlet cover counterclockwise until cover is free of the side vent.
5. Pull side vent from slot in lower vent duct.
6. When reassembling components, make sure gasket on lower vent duct is properly installed.

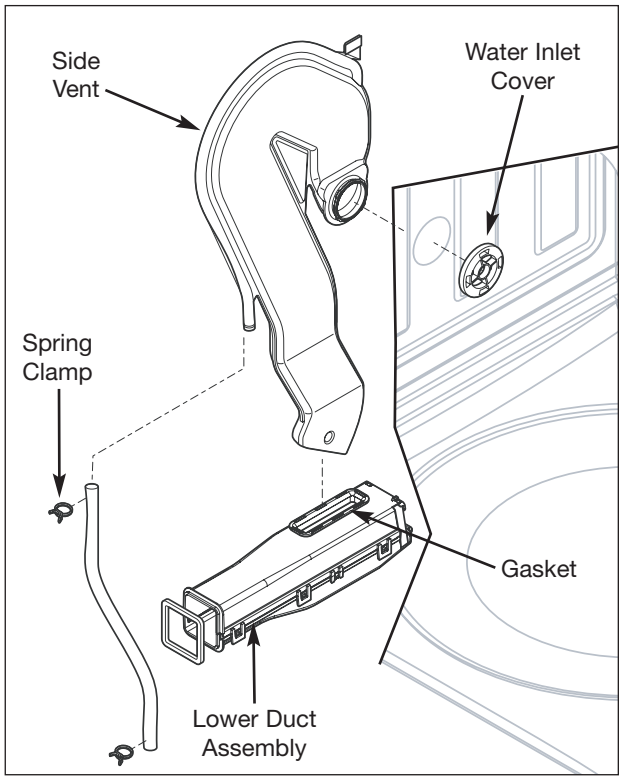

Figure 5-33. Side Vent Removal

Motor and Pump Area Components

Base Tray Removal

The base tray is a solid plastic cover with raised edges that can hold up to a quart of water in the event of a leak. The base tray is secured to the underside of the unit frame with two tabs that fit in slots cut in the rear of the unit frame and a screw in the front two corners.

To remove the base tray:

1. Remove unit from its installation position.
2. Tilt unit back to access the screws along the edge of the unit base. If blocking materials are not available, the unit may be set on its back.
2. Using a phillips head screwdriver, extract the two screws securing the base tray to the unit frame. (See Figure 5-34)
3. Tilt the front of the base tray away from the unit then push backwards to release the tabs from the locating slots in the rear of the unit. Remove base tray for unit.

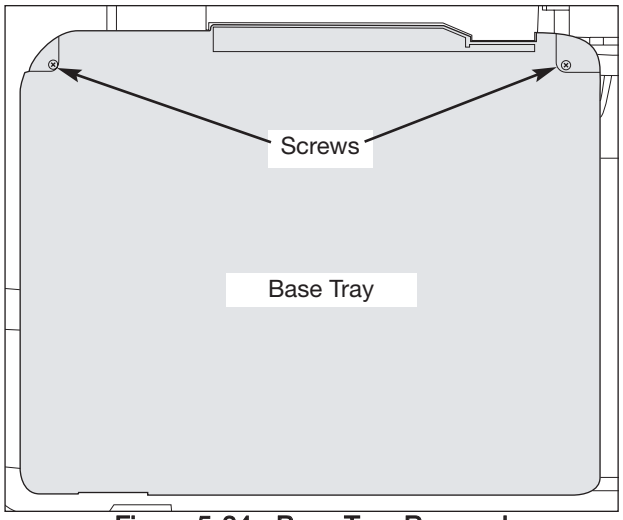

Figure 5-34. Base Tray Removal

Flood Switch Removal

The flood switch is a sensor mounted to the inside corner of the wash motor mount, with four pins pointed down into the base tray. The two outside pins are used to sense water in the base cover.

To remove the flood switch:

1. Pull unit from its installation position.
2. Remove the base tray.
3. Using your fingers, spread out the retaining clips while pushing the flood switch out from the opposite side of the mount. (See Figure 5-35)
4. Disconnect the electrical leads at the control assembly. Carefully extract the wire leads and switch from wire harness.

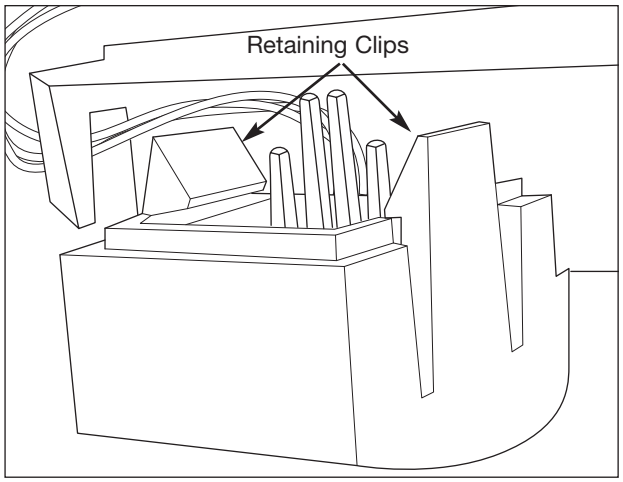

Figure 5-35. Flood Switch Removal

Turbidity Sensor/ Thermistor

The turbidity sensor/ thermistor is located in the front portion of the water collection section of the sump. This sensor is used by the control to determine the turbidity of the water, then adjust the cycle length as needed, and also to determine water temperature in the dishwasher. An o-ring seals the sensor from leaking water into the base tray.

The thermistor is wired to the electronic control and can be checked at the control for resistance. The thermistor is checked by reading its resistance at room temperature; this will be 10K ohms, if it is checked after a fill, the reading will very depending on water temperature.

To remove the turbidity sensor/ thermistor:

1. Pull unit from its installation position. Lay unit on its back.
2. Remove the base tray.
3. Push back the retaining clip and pull electrical connection from turbidity sensor/ thermistor. (See Figure 5-36)
4. Using a #20 Torx bit, extract the two screws securing the turbidity sensor/ thermistor to the bottom of the sump. Pull sensor from unit.

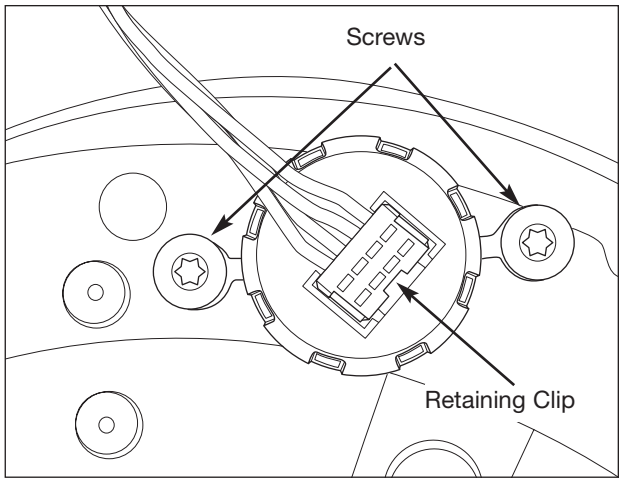

Figure 5-36. Turbidity Sensor/ Thermistor Removal

Inline Heater Assembly Removal

Water pulled from the sump by the wash pump first passes through the inline heater before entering the water distribution system. The inline heater assembly is made up of a 1200 watt heater, formed into a coil, along with a safety thermostat and a thermal fuse all mounted onto a stainless steel tube.

The inline heater can be checked for resistance at the electronic control. The ohms reading on a cold heater is 11.7 ohms. The inline heater is not to be checked with power applied without water in unit.

The safety thermostat is a self resetting thermostat that opens at 200° F and resets at 100°F. The thermal fuse is a one time fuse that opens at 440°F. If the thermal fuse should open, the heater assembly will need to be replaced.

NOTE: *If unit was operated prior to service, water may be present in the tubing. Have a towel or absorbent material on hand when servicing water system components.*

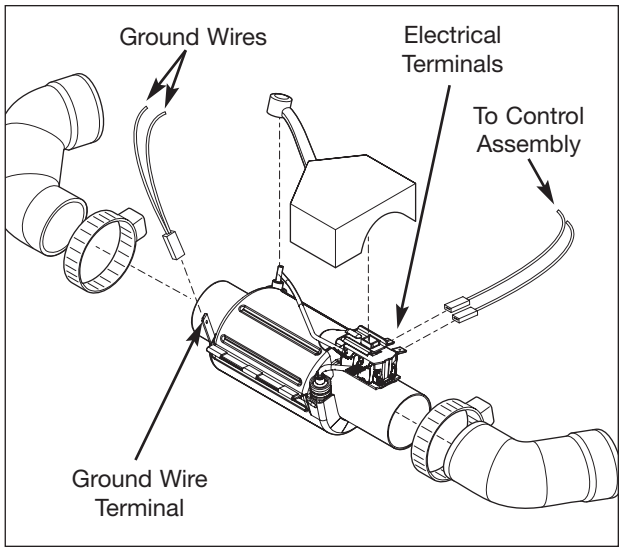

Figure 5-37. Inline Heater Assembly Removal

To remove the inline heater:

1. Pull unit from its installation position. Lay unit on its back.
2. Remove the base tray.
3. Disconnect the electrical leads from the inline heater terminals and the ground wire from the terminal on the inline heater housing. (See Figure 5-37)
4. Using a flat bladed screwdriver, loosen the tubing clamps from both ends of the inline heater.
5. Pull tubing off both ends of inline heater and remove from unit. The plastic cover snaps onto the wire lead of the heating coil and covers the high voltage components.

Wash Pump and Motor Removal

The wash pump mounts to the face of the motor and is supplied only as an assembly. The motor is a variable speed, 120VAC, 1.5amp motor with a running capacitor and turns clockwise. The speed of the motor is determined by the cycle selected and controlled by the electronic control. This speed can vary from a high of 3300rpm to a low of 2200 rpm. The control monitors this speed by input from a tachometer mounted on the motor.

⚠ WARNING

CAPACITORS MAY REMAIN ACTIVE AFTER ELECTRICAL POWER IS DISCONNECTED. DISCHARGE CAPACITORS BEFORE SERVICING THE WASH MOTOR.

The motor is checked for resistance at the electronic control between the blue and white leads, the reading shroud be 22.9 ohms. The tachometer is checked at the control with the ohms reading approximately 219.9 ohms between the two green/yellow wires on the motor plug.

To remove the wash pump and motor:

1. Pull unit from its installation position. Lay unit on its back.
2. Remove the base tray.
3. Using a flat bladed screwdriver, loosen the tubing clamps from both ends of the wash pump. Pull tubing from wash pump.

NOTE: If unit was operated prior to service, water may be present in the tubing. Have a towel or absorbent material on hand when servicing water system components.

4. Using a #20 Torx bit, extract the three screws securing the motor mount plate to the unit frame. Pull mount plate away from unit base. The flood switch can be removed from the mount plate to make accessing the wash pump and motor components easier. (See Figure 5-38)
5. Disconnect ground wire from wash motor terminal. (See Figure 5-39)
6. Disconnect electrical leads at quick disconnect mounted to the motor shield.
7. Using a 3/16” socket, extract screw securing the capacitor to the motor mounting plate.
8. Using a #15 Torx bit, extract the four screws securing the wash motor and pump assembly to the motor mount plate.
9. The motor shield is removed by using a #20 Torx bit and extracting the two screws securing the motor shield to the wash motor.

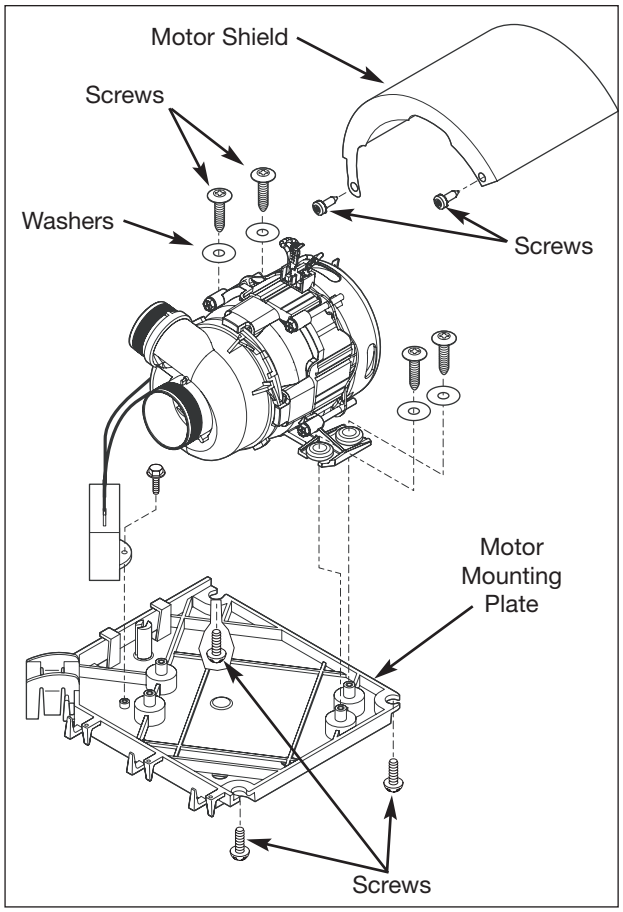

Figure 5-38. Wash Pump and Motor Removal

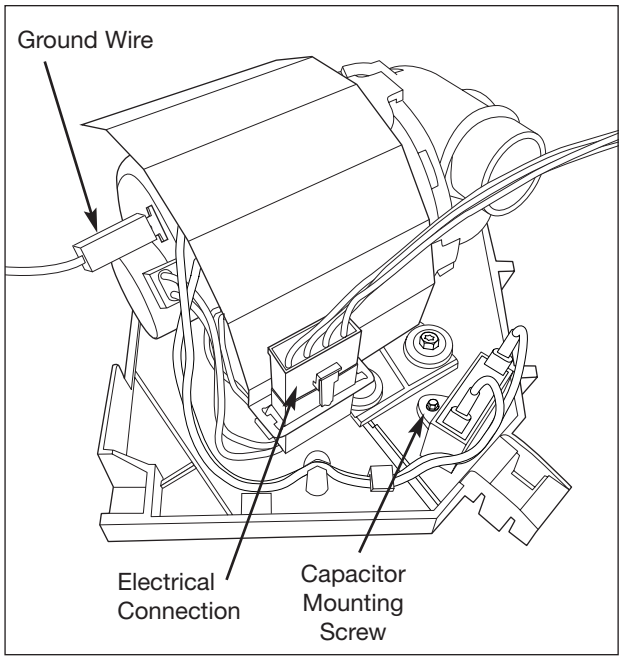

Figure 5-39. Wash Pump and Motor Electrical Connections

Drain Pump Removal

The drain pump pulls water from the sump to drain the dishwasher. This pump is a wet rotor style and is mounted with two screws to the bottom of the sump.

The drain pump can be checked for resistance at the electronic control. The normal resistance for the drain motor is 21.5 ohms.

To remove the drain pump:

1. Pull unit from its installation position. Lay unit on its back.
2. Remove the base tray.
3. Using a flat bladed screwdriver, loosen the tubing clamp from the output end of the drain pump. Pull tubing from drain pump.
   Use a pliers to remove the spring clamp from the tubing connected to the drain inlet.
   (See Figure 5-40)

NOTE: *If unit was operated prior to service, water may be present in the tubing. Have a towel or absorbent material on hand when servicing water system components.*

4. From the underside of the drain pump, push back the retaining clip with a small flat bladed screwdriver and pull electrical connection from drain pump.
5. Using a #20 Torx bit, extract the two screws securing drain pump to the sump.
6. To remove the drain pump and bracket, first pull drain pump down away from inlet tubing until the bracket is free of the upper grommet and pump is free of the inlet tubing. Then slide pump and bracket to the left until free of the right side grommet.
7. Remove the mounting bracket from drain pump by using a phillips head screwdriver and extracting the screw that secures the mounting bracket to the drain pump. (See Figure 5-41)
8. The drain pump has a cover over the pumping chamber that can be removed for cleaning. Extract the three screws securing the cover to the drain pump.
9. The cover can be pulled from the drain pump body. Make sure to clean the o-ring before reassembly.

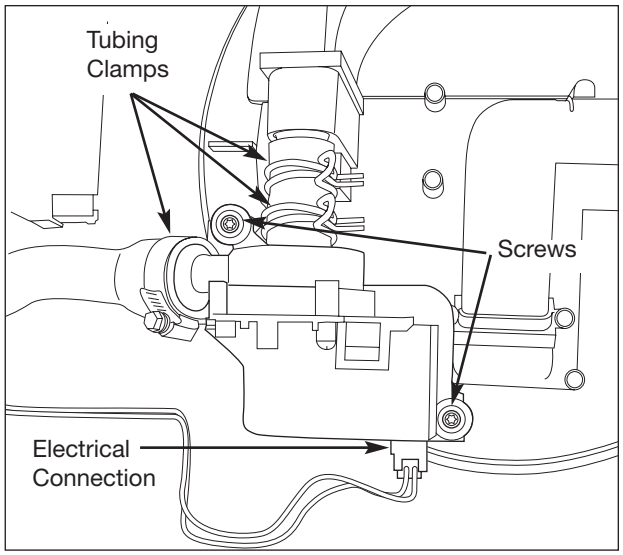

Figure 5-40. Drain Pump Removal

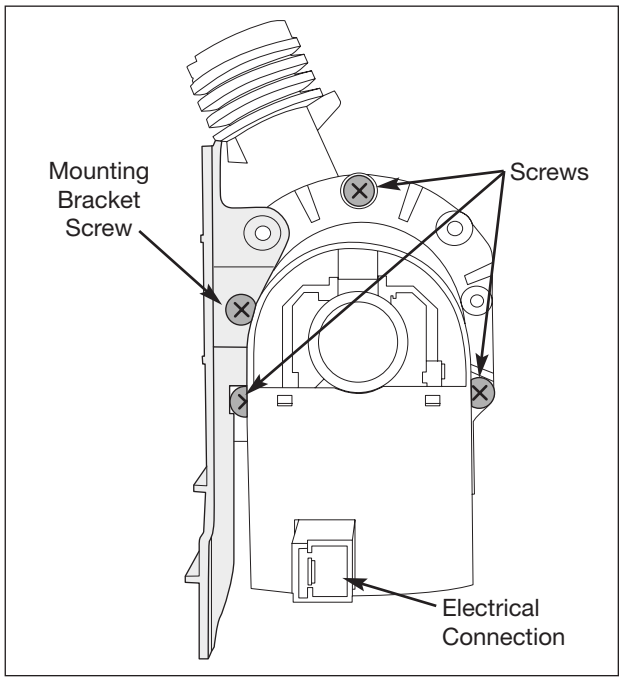

Figure 5-41. Drain pump Breakdown

Drain Valve Removal

The drain valve is intended to maintain the proper level of water in the tub. This valve is installed between the drain hose and the drain pump. The valve consists of a check ball in a cradle, a motor and a location cam and switch. The motor rotates the check ball in the housing to open and close the drain port. The cam and switch are used by the electronic control to determine the location of the ball at all times.

The valve can be checked at the control for resistance with a desired reading of 1.09K ohms. This is checked between the green and green/yellow wires. The cam switch is read between the remaining two green wires for the valve. These will read open when the valve is closed and read closed when the valve is open. The drain pump can be checked for resistance at the electronic control. The normal resistance for the drain motor is 21.5 ohms.

To remove the drain valve:

1. Pull unit from its installation position. Lay unit on its back.
2. Remove the base tray.
3. Using a flat bladed screwdriver, loosen the tubing clamp from the input end of the drain valve. Use a pliers to remove the spring clamp from the tubing connected to the drain outlet. Pull tubing from drain valve. (See Figure 5-42)

NOTE: *If unit was operated prior to service, water may be present in the tubing. Have a towel or absorbent material on hand when servicing water system components.*

4. Using a #20 Torx bit, extract the two screws securing drain valve to the unit frame.
5. From the top of the drain valve, push back the retaining clip with a small flat bladed screw-driver and pull electrical connection from drain valve.

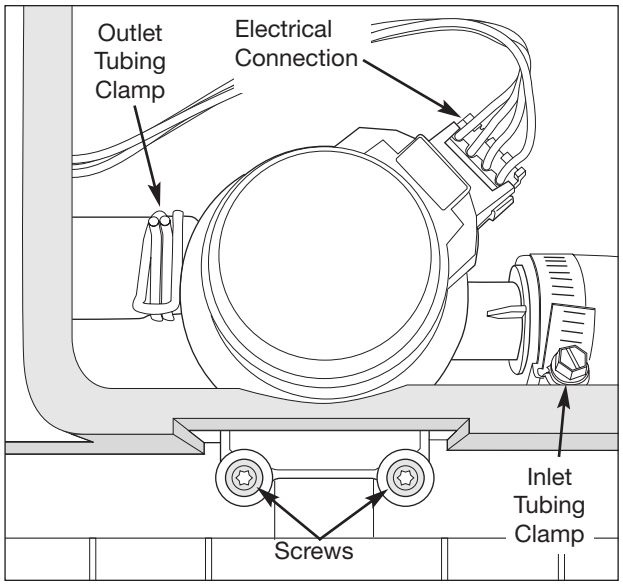

Figure 5-42. Drain Valve Removal

Lower Vent Fan Removal

The lower vent fan operates on 12VDC from the electronic control with a speed of 3500 rpm. The operation is monitored by the control by the amperage draw of the fan motor. If this blower fails, the control will show a failure code and stop the dishwasher.

The drain pump can be checked for resistance at the electronic control. The normal resistance for the drain motor is 21.5 ohms.

To remove the drain pump:

1. Pull unit from its installation position. Lay unit on its back.
2. Remove the base tray.
3. Reach behind lower vent fan and push fan motor out of slot in the lower duct assembly. The lower duct assembly has retaining latches molded into the slot that locate in the four holes of the fan motor. Using a small flat bladed screwdriver to pry out the front two retaining latches will aid in removal. (See Figure 5-43)
4. Disconnect electrical leads at control assembly then carefully pull fan motor with electrical leads out of unit.

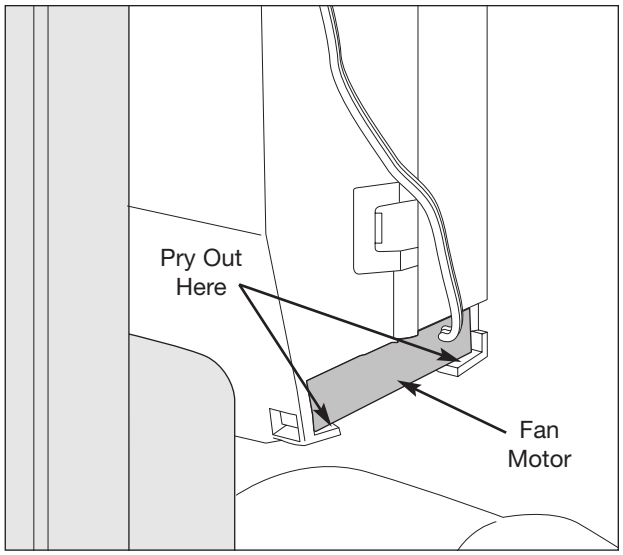

Figure 5-43. Lower Vent Fan Removal

Section 5

Parts Lists and Exploded Views

Electrolux

Control Components EIDW6105G (EIDW6105GB0)

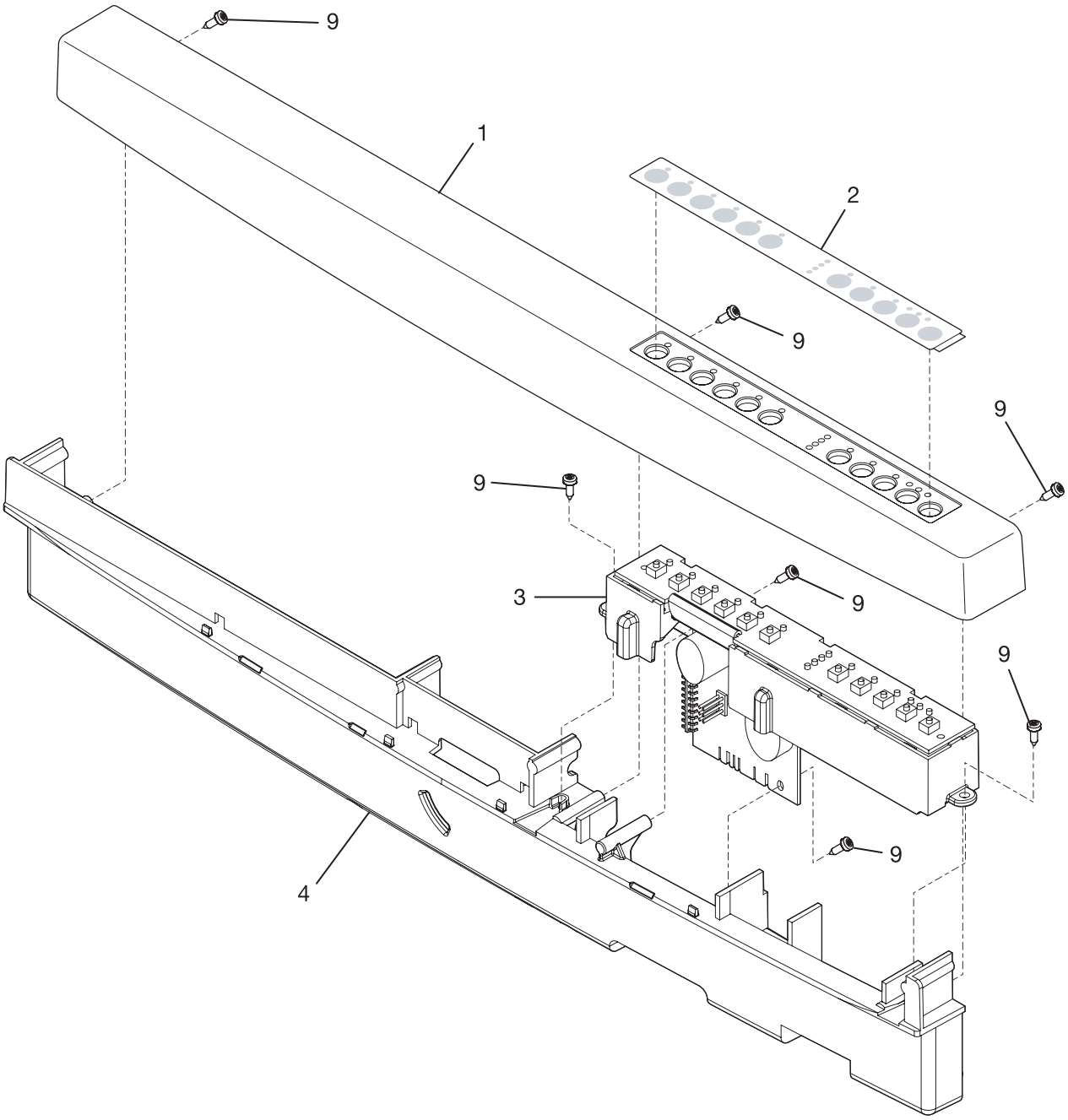

Model Index: A EIDW6105G (EIDW6105GB0)
B EIDW6105G (EIDW6105GS0)
C EIDW6105G (EIDW6105GW0)

Ref #	Part #		Description
1.	7154621303	A - -	Panel, control, black
1.	7154621306	- B -	Bracket, slide mtg., (2)
1.	7154621301	- - C	Nut, hex keps, #8-32, (9)
2#.	7154621403	A B -	Bracket, filter retainer, 30"
2#.	7154621401	- - C	Bracket, filter retainer, 36"
3#.	7154621701	A B C	Bracket, filter retainer, 46"/48"
4.	7154650001	A B C	Support, filter
9.	7154625702	A B C	Top Cap, weldment, 30"
* #	7154654201	A B C	Top Cap, weldment, 36"
*	7154678401	A B C	Top Cap, weldment, 46"

Functional Parts
* Non-Illustrated Parts

Electrolux

Door Components EIDW6105G (EIDW6105GB0)

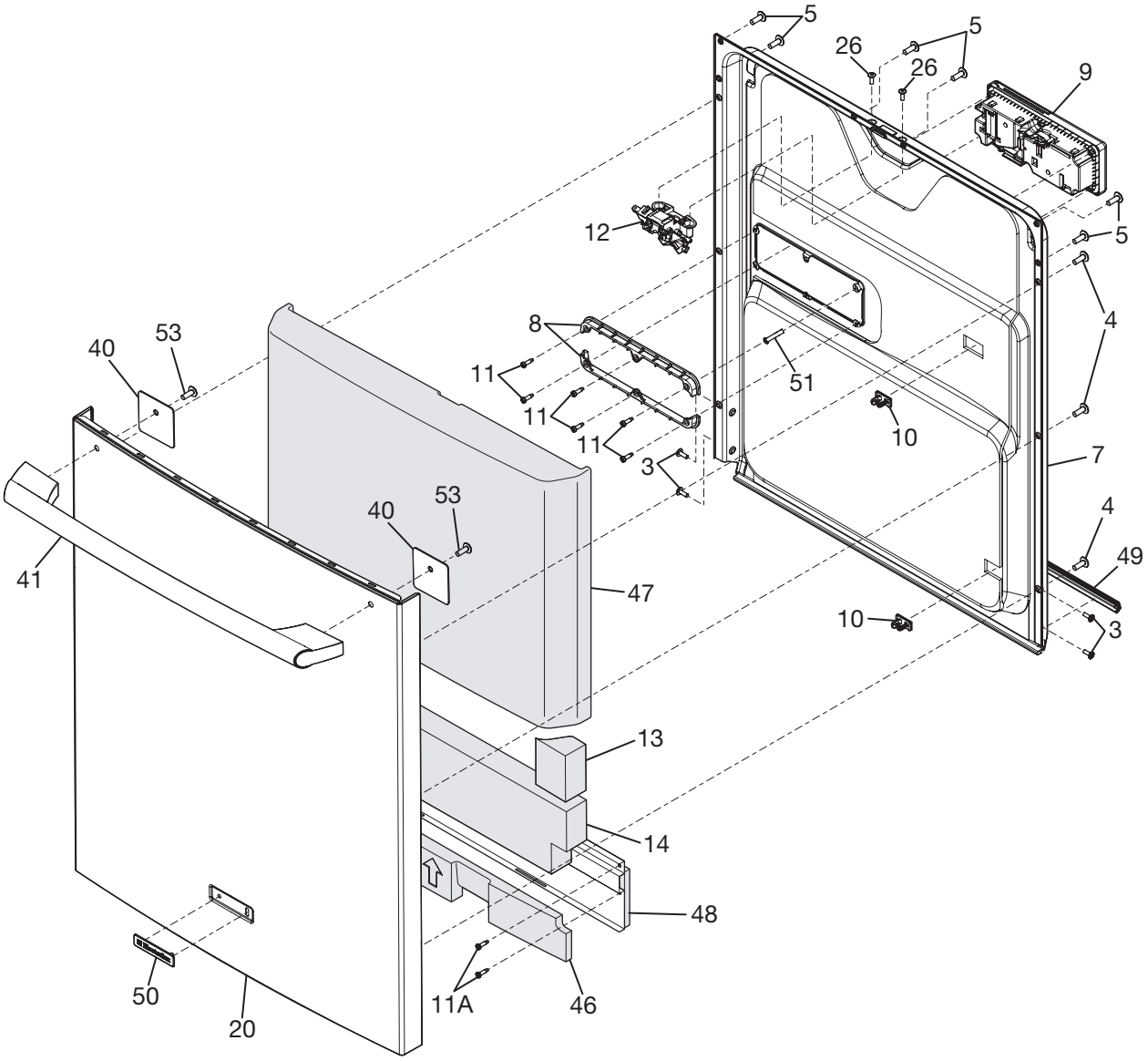

Model Index: A EIDW6105G (EIDW6105GB0)
B EIDW6105G (EIDW6105GS0)
C EIDW6105G (EIDW6105GW0)

Ref #	Part #		Description
3.	7154518201	A B C	Screw, 6 lobe recess, #10-32, (4)
4.	7154603801	A B C	Screw, low profile, truss, (6)
5.	7154603701	A B C	Screw, PH, #10-16 hi-lo, (6), 6 lobe
7.	7154509701	A B C	Liner Assembly, door, inner, w/mastic
8.	7154670901	A B C	Bracket, dispenser mtg., (2)
9.	7154574405	A B C	Dispenser, det/rinse aid, w/reed switch
10.	7154633501	A B C	Clip, wiring harness
11.	7154625702	A B C	Screw, FT PH 6 lobe, #8-18
11A.	7154518301	A B C	Screw, 6 lobe recess, #8-18
12.	7154671401	A B C	Latch Assembly, door, w/shield
13.	7154670701	A B C	Foam, door, sides, (2)
14.	7154623401	A B C	Foam, door
20.	7154616603	A - -	Door, outer, black
20.	7154603501	- B -	Door, outer, stainless
20.	7154616601	- - C	Door, outer, white
26.	7154519101	A B C	Screw, Phlps Hd, #10-16 hi lo, (4)
40.	7154603401	A B C	Plate, handle support, (2)
41.	7241761014	A - -	Handle, door, black
41.	7241761013	- B -	Handle, door, stainless
41.	7241761015	- - C	Handle, door, white
46.	7154690501	A B C	Support, door, bottom
47.	7154672001	A B C	Moisture Barrier, assembly, door, w/data sheet
48.	7154670301	A B C	Reinforcement, assembly, door
49.	7154610601	A B C	Gasket, door bottom
50.	7154658703	A - -	Nameplate, Electrolux, black
50.	7154658705	- B -	Nameplate, Electrolux, stainless
50.	7154658701	- - C	Nameplate, Electrolux, white
51.	7154320301	A B C	Clamp, drip loop, wire
53.	7154633601	A B C	Screw, handle mtg., (2)

Functional Parts
* Non-Illustrated Parts

Electrolux

Upper Frame and Tub Components EIDW6105G (EIDW6105GB0)

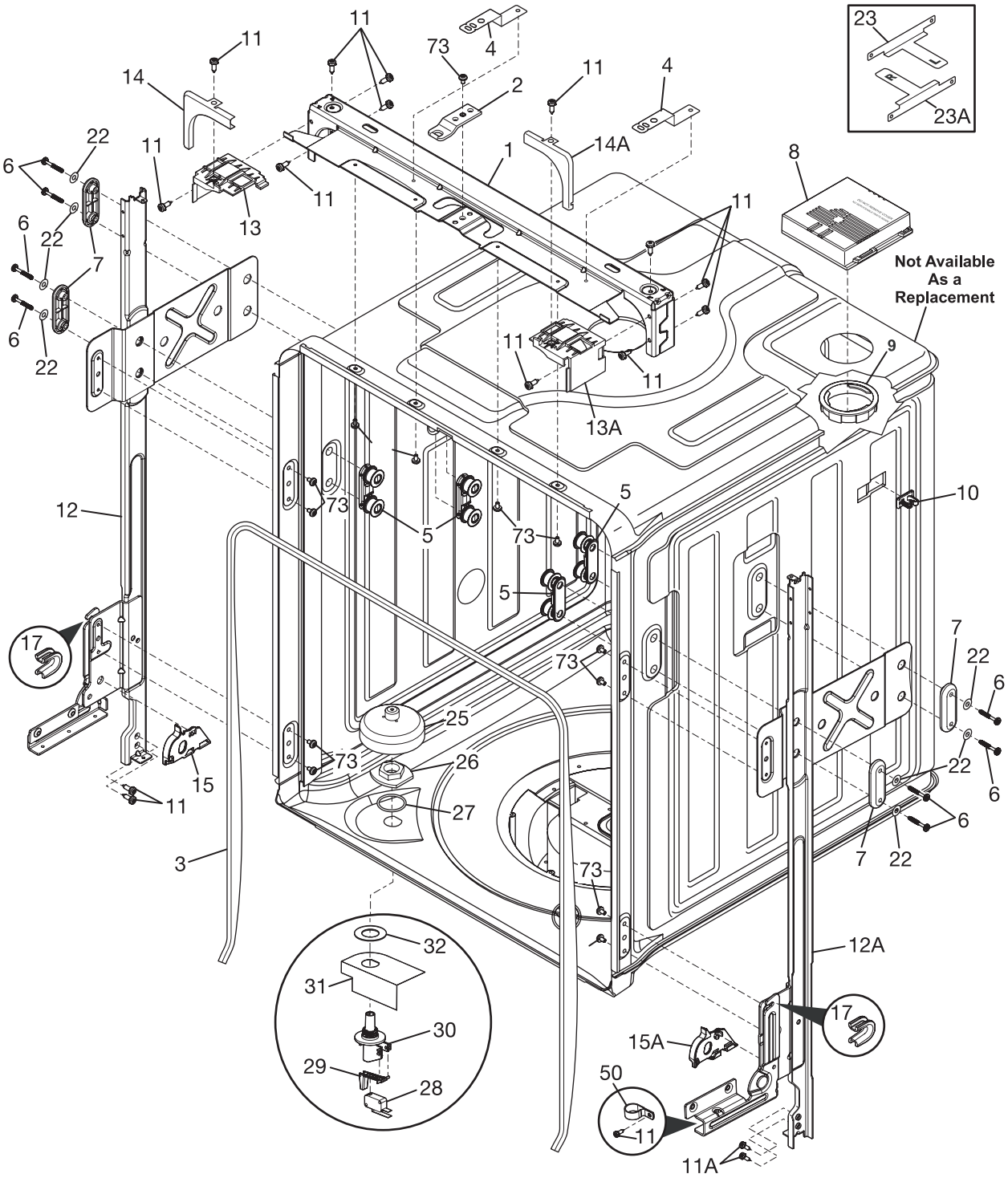

Model Index: A EIDW6105G (EIDW6105GB0)
B EIDW6105G (EIDW6105GS0)
C EIDW6105G (EIDW6105GW0)

Ref #	Part #		Description
1.	7154500701	A B C	Brace, frame, top
2.	7154511401	A B C	Strike, door latch
3.	7154513401	A B C	Gasket, tub
4.	7154657901	A B C	Clip, cabinet mtg., top mount, (2)
4*.	7154657201	A B C	Screw, cabinet clip, (2)
5.	7154510702	A B C	Roller Assembly, tub, (4), w/gasket
6.	7154572801	A B C	Screw, tub roller, (8)
7.	7154510601	A B C	Plate, retainer, outer, (2), tub roller
8#.	7154688501	A B C	Vent Assembly, upper
8*.	7154691601	A B C	Cover, connector, vent assy
9.	7154622601	A B C	Bezel, vent assy, upper
10.	7154633501	A B C	Clip, wiring harness
11.	7154518301	A B C	Screw, 6 lobe recess, #8-18
11A.	7154200701	A B C	Screw, #10-32 x 3/8
12.	7154612901	A B C	Leg and Hinge Assembly, left hand, front
12A.	7154613001	A B C	Leg and Hinge Assembly, right hand, front
13.	7154654401	A B C	Bracket, cabinet clip, LH
13A.	7154654501	A B C	Bracket, cabinet clip, RH
14.	7154502901	A B C	Trim, corner, LH
14A.	7154502001	A B C	Trim, corner, RH
15.	7154656801	A B C	Cover, hinge arm, LH
15A.	7154656901	A B C	Cover, hinge arm, RH
17.	7154671501	A B C	Bushing, hinge arm cable, (2)
22.	75300809968	A B C	Washer
23.	7154654601	A B C	Clip, cabinet mtg., LH
23A.	7154654701	A B C	Clip, cabinet mtg., RH
25.	7154506702	A B C	Float, tub flood
26.	7154506902	A B C	Nut, float switch
27.	7154677201	A B C	Gasket, float switch
28#.	7154507001	A B C	Switch, float
29.	7154517001	A B C	Actuator, float switch
30.	7154506601	A B C	Bracket, float switch
31.	7154657101	A B C	Shield, float bracket
32.	7154506801	A B C	Washer, float switch
50.	7154690101	A B C	Clamp, wiring
73.	7154518401	A B C	Screw, 6 lobe recess, #8-32
* #	7154627701	A B C	Harness, wiring, float switch
*	7154662101	A B C	Cabinet Seal Kit
*	7154623602	A B C	Insulation, blanket
*	7154679701	A B C	Clip, insulation, (2)

Functional Parts
* Non-Illustrated Parts

Electrolux

Motor and Pump Components EIDW6105G (EIDW6105GB0)

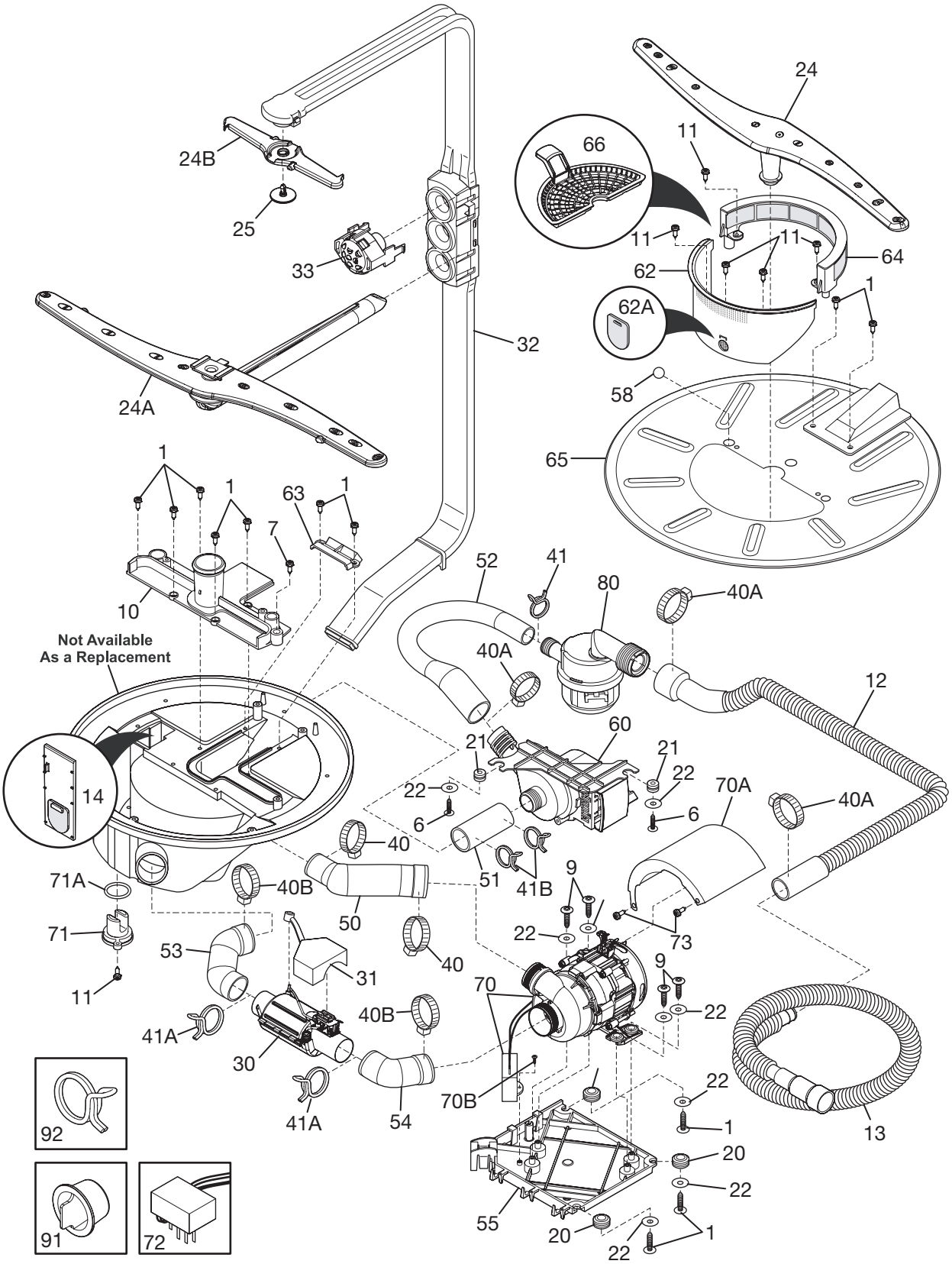

Model Index: A EIDW6105G (EIDW6105GB0)
B EIDW6105G (EIDW6105GS0)
C EIDW6105G (EIDW6105GW0)

Ref #	Part #		Description
1.	7154518001	A B C	Screw, pan head, #10-16 x .8"
6.	7154518301	A B C	Screw, 6 lobe recess, #8-18
7.	7154673501	A B C	Screw, 6 lobe recess, #10 hi lo
9.	7154625701	A B C	Screw, #8-18 hi lo
10.	7154602001	A B C	Support, lower spray arm
11.	75303316032	A B C	Screw, truss ss, 8 .625, (7)
12.	7154654801	A B C	Hose, drain, Intermediate
13.	7154654901	A B C	Hose, drain, main
14.	7154511801	A B C	Check valve, assembly, drain, w/flapper
20.	7154678602	A B C	Grommet, vibration, (3)
21.	7154672502	A B C	Grommet, vibration, (2)
22.	75300809968	A B C	Washer
24.	7154610001	A B C	Spray arm, assembly, lower
24A.	7154508201	A B C	Spray arm, assembly, middle, w/manifold
24B.	7154649502	A B C	Spray arm, assembly, upper
25.	7154650102	A B C	Pin, spray arm, upper
30#.	7154503701	A B C	Heater, inline, water, 1200W
31.	7154622901	A B C	Cover, inline heater
32.	7154515602	A B C	Tubing Assembly, delivery, w/check valve
33.	7154616502	A B C	Nozzle Assembly, Mid Level
40.	7154106801	A B C	Clamp, hose, 1.29" open, worm gear, (2)
40A.	7154380601	A B C	Clamp, hose, 1.5" open, worm gear, (5)
40B.	7154672601	A B C	Clamp, hose, 1.75" open, worm gear, (2)
41.	7154348401	A B C	Clamp, hose, red, push spring, (3)
41A.	7154611101	A B C	Clamp, SPRING, red, (2)
41B.	7154691501	A B C	Clamp, SPRING, (2)
50.	7154679602	A B C	Hose, sump to, motor, circulation
51.	7154491202	A B C	Hose, sump to, drain pump
52.	7154622402	A B C	Hose, drain pump, to drain valve
53.	7154653201	A B C	Hose, sump to, inline heater
54.	7154653301	A B C	Hose, inline heater, to motor
55.	7154677101	A B C	Plate, motor mounting
58.	7154512401	A B C	Check ball
60.	7154618701	A B C	Pump Assembly, drain, w/bracket
62.	7154600702	A B C	Filter Assembly, vertical, w/flapper
62A.	7154511601	A B C	Flapper, drain check
63.	7154513501	A B C	Cover, delivery tube
64.	7154604502	A B C	Filter Assembly, fine soil, pressurized
65.	7154624901	A B C	Filter Assembly, coarse soil, w/chimney
66.	7154514302	A B C	Trap, glass
70 #.	7154614001	A B C	Motor & Pump Assy, circulation, w/capacitor
70A.	7154656401	A B C	Shield, motor, circulation
70B.	7154614401	A B C	Screw, capacitor mtg.
71#.	7154473901	A B C	Sensor, turbidity
71*#.	7154627001	A B C	Harness, wiring, turbidity
71A.	7154376001	A B C	O-ring, turbidity
72#.	7154655901	A B C	Sensor, leak detector
73.	7154518401	A B C	Screw, 6 lobe recess, #8-32
80#.	7154622001	A B C	Drain Valve, assembly, stepper
91.	7154676701	A B C	Plug, drain hose
92.	7154348502	A B C	Clamp, red, hose

Electrolux

Lower Frame Components EIDW6105G (EIDW6105GB0)

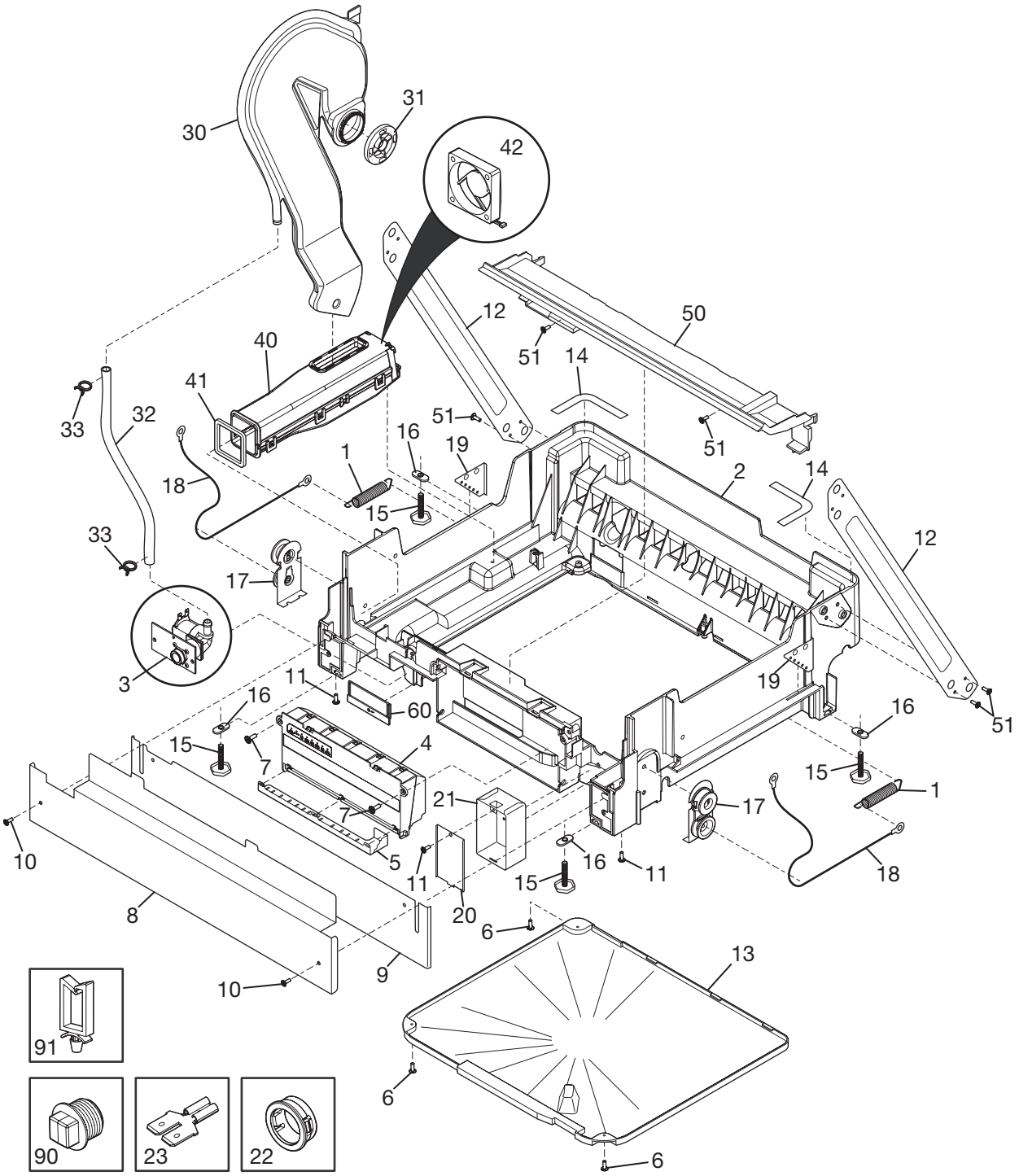

Model Index: A EIDW6105G (EIDW6105GB0)
B EIDW6105G (EIDW6105GS0)
C EIDW6105G (EIDW6105GW0)

Ref #	Part #		Description
1.	7154514801	A B C	Spring, door hinge, (2)
2.	7154502601	A B C	Base, frame mounting
3 #.	7154513601	A B C	Valve Assembly, water
3*.	7154689201	A B C	Deflector, valve
4 #.	7154515001	A B C	Control Assembly
5.	7154624701	A B C	Bracket, control housing
6.	7154294701	A B C	Screw, #7 plas .375, (6), disp. assy.
7.	7154673501	A B C	Screw, 6 lobe recess, #10 hi lo
8.	7154658003	A - -	Kickplate, black, w/label
8.	7154658005	- B -	Kickplate, stainless, w/label
8.	7154658001	- - C	Kickplate, white, w/label
9.	7154679303	A - -	Toe Plate, adjustable, black, w/damper
9.	7154679305	- B -	Toe Plate, adjustable, stainless, w/damper
9.	7154679301	- - C	Toe Plate, adjustable, white, w/damper
10.	7154371304	A - -	Screw, phillips head, black
10.	7154371307	- B -	Screw, phillips head, silver mist
10.	7154371301	- - C	Screw, phillips head, white
11.	7154518301	A B C	Screw, 6 lobe recess, #8-18
12.	7154501301	A B C	Frame, diagonal, leg, (2)
13.	7154658101	A B C	Tray, base, w/label
14.	7154610301	A B C	Tape, connection, (2), base to tub
15.	7154571101	A B C	Leg, leveling, (4)
16.	7154515401	A B C	Plate, mounting, (4), leveling leg
17.	7154516501	A B C	Bracket Assembly, pulley, (2)
18.	7154658601	A B C	Cable, hinge pulley, (2) .
19.	7154514901	A B C	Plate, adjustment, (2), door spring
20.	7154658201	A B C	Cover, junction box, w/label
21.	7154517501	A B C	Box, junction
22.	7154610701	A B C	Grommet, electrical
23.	7154671801	A B C	Connector, ground, 1 female, to 2 male
30.	7154617901	A B C	Duct Assembly, side drying, w/gasket
31.	7154618301	A B C	Cover, drying inlet
32.	7154625001	A B C	Tubing, water inlet
33.	75303318539	A B C	Clamp, tubing, (2)
40#.	7154617601	A B C	Duct Assembly, lower drying, w/motor
41.	7154617801	A B C	Gasket, drying duct, lower
42#.	7154619101	A B C	Motor, drying
50.	7154670401	A B C	Adaptor Plate, assembly, w/foam
51.	7154518001	A B C	Screw, pan head, #10-16 x .8"
60.	7154622701	A B C	Cover, valve service
90.	7154679801	A B C	Plug, water valve
91.	7154690001	A B C	Clip, wiring
* #	7154654001	A B C	Harness, wiring, base, LH side
* #	7154688401	A B C	Harness, wiring, RH side, base
*	7154672301	A B C	Screw, 6 tri lobe, #10 PH, (2)

Functional Parts
* Non-Illustrated Parts

Electrolux

Rack Components EIDW6105G (EIDW6105GB0)

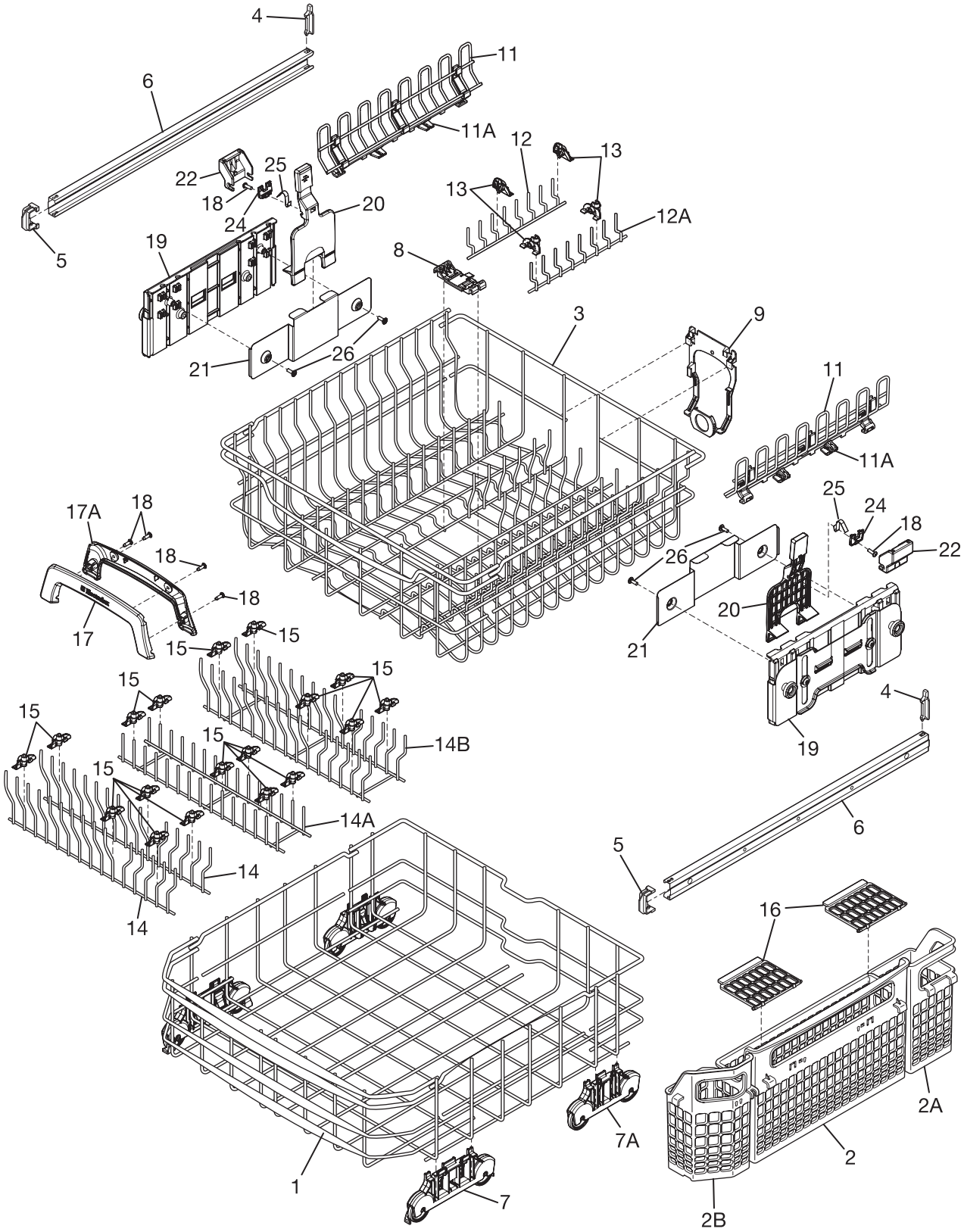

Model Index: A EIDW6105G (EIDW6105GB0)
B EIDW6105G (EIDW6105GS0)
C EIDW6105G (EIDW6105GW0)

Ref #	Part #		Description
1.	7154625401	A B C	Rack Assembly, lower
2.	7154632401	A B C	Basket, silverware, main, center
2A.	7154632601	A B C	Basket, silverware, side, rear
2B.	7154632701	A B C	Basket, silverware, side, front
2C.	7154653001	A B C	Holder, silverware, flexible
3.	7154625301	A B C	Rack Assembly, upper
4.	7154510902	A B C	Clip, guide rail, rear, (2)
5.	7154510805	A B C	Cap, guide rail, front, (2)
6.	7154510401	A B C	Guide Rail, upper rack, (2)
7.	7154671301	A B C	Roller Assembly, lower rack, front, (2)
7A.	7154689501	A B C	Roller Assembly, lower rack, rear, (2)
8.	7154610501	A B C	Bracket, spray arm, middle, mounting
9.	7154613402	A B C	Clip, manifold mtg, back
10.	7154581203	A B C	Basket Assy, knife holder
10A.	7154581303	A B C	Holder, snap in
10B.	7154632101	A B C	Tray, utility
10C.	7154652001	A B C	Lid, utility tray
11.	7154629002	A B C	Shelf, cup, upper rack, (2)
11A.	7154629102	A B C	Clip, cup shelf, upper rack, (2)
12.	7154629302	A B C	Fence, fold down, LH center, upper rack
12A.	7154654302	A B C	Fence, fold down, RH center, upper rack
12B.	7154652102	A B C	Fence, fold down, upper rack
13.	7154629402	A B C	Clip, fold down fence, upper rack, (4)
13A.	7154652202	A B C	Clip, fence, upper rack
14.	7154630902	A B C	Fence, fold down, lower rack, (2), single
14A.	7154631102	A B C	Fence, fold down, lower rack, (2)
15.	7154428403	A B C	Bracket, fence, lower rack, (18)
16.	7154631401	A B C	Lid, main basket, side, (2)
16A.	7154632501	A B C	Lid, main basket, LH center
16B.	7154651701	A B C	Lid, main basket, RH center
16C.	7154649001	A B C	Lid, basket, knife
16D.	7154651801	A B C	Lid, basket, chopsticks
16E.	7154634901	A B C	Lid, basket, RH side
17.	7154629503	A B C	Handle, front, upper rack, Electrolux
17A.	7154629601	A B C	Handle, back, upper rack
18.	7154629701	A B C	Screw, handle, upper rack, (4)
19.	7154673701	A B C	Plate Assembly, adjustment mech, RH outer, upper rack
19A.	7154673601	A B C	Plate Assembly, adjustment mech, LH outer, upper rack
20.	7154655101	A B C	Actuator Pad, assembly, upper rack, (2), mechanical adj
21.	7154630101	A B C	Plate, adjustment mtg., inner, (2), upper rack
22.	7154630301	A B C	Housing, adjustment mech, upper rack, (2)
24.	7154655201	A B C	Clamp, actuator, upper rack, (2), adjustment mech
25.	7154630201	A B C	Spring, adjustment mech, upper rack, (2)
26.	7154673501	A B C	Screw, 6 lobe recess, #10 hi lo
27.	7154528803	A B C	Clip, cup, (2)
28.	7154631503	A B C	Handle, lower rack, front
29.	7154631601	A B C	Handle, lower rack, back
30.	7154632301	A B C	Clip, holder, champagne, (2)
31.	7154632201	A B C	Holder, champagne glass, (2)

Electrolux

Control Components EIDW6305G

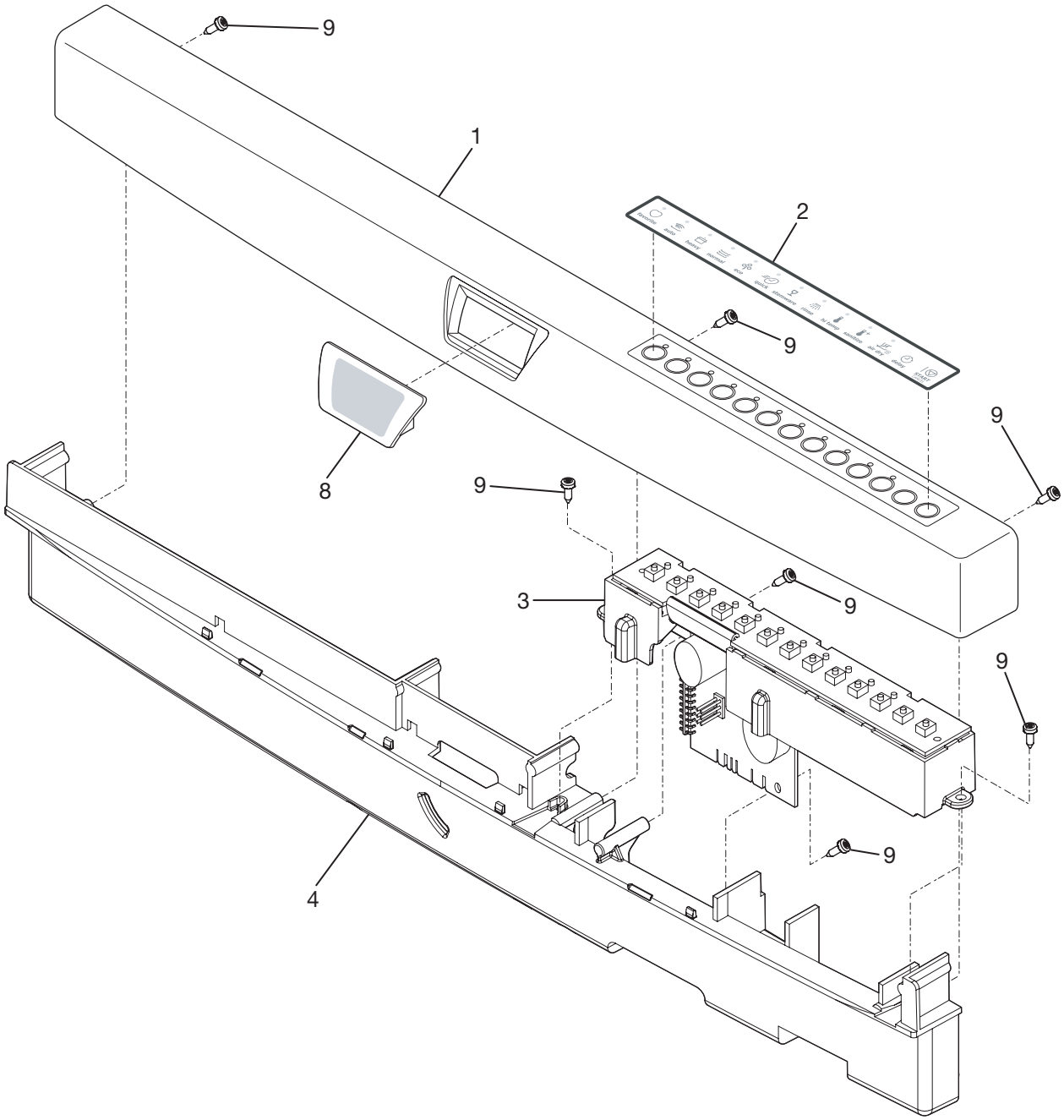

Model Index: A EIDW6305G (EIDW6305GB0)
B EIDW6305G (EIDW6305GS0)
C EIDW6305G (EIDW6305GW0)

Ref #	Part #		Description
1.	7154620503	A - -	Panel, control, black
1.	7154620506	- B -	Panel, control, stainless
1.	7154620501	- - C	Panel, control, white
2.	7154620603	A - -	Overlay, console, black
2.	7154620606	- B -	Overlay, console, stainless
2.	7154620601	- - C	Overlay, console, white
3#.	7154621001	A B C	Control Board, assembly, w/bracket
4.	7154650001	A B C	Frame, console
8#.	7154621101	A B C	Display Assembly, ** #
9.	7154625702	A B C	Screw, FT PH 6 lobe, #8-18
* #	7154654201	A B C	Harness, wiring, main, control/door
*	7154678401	A B C	Label, energy guide

Functional Parts
* Non-Illustrated Parts

Electrolux

Door Components EIDW6305G

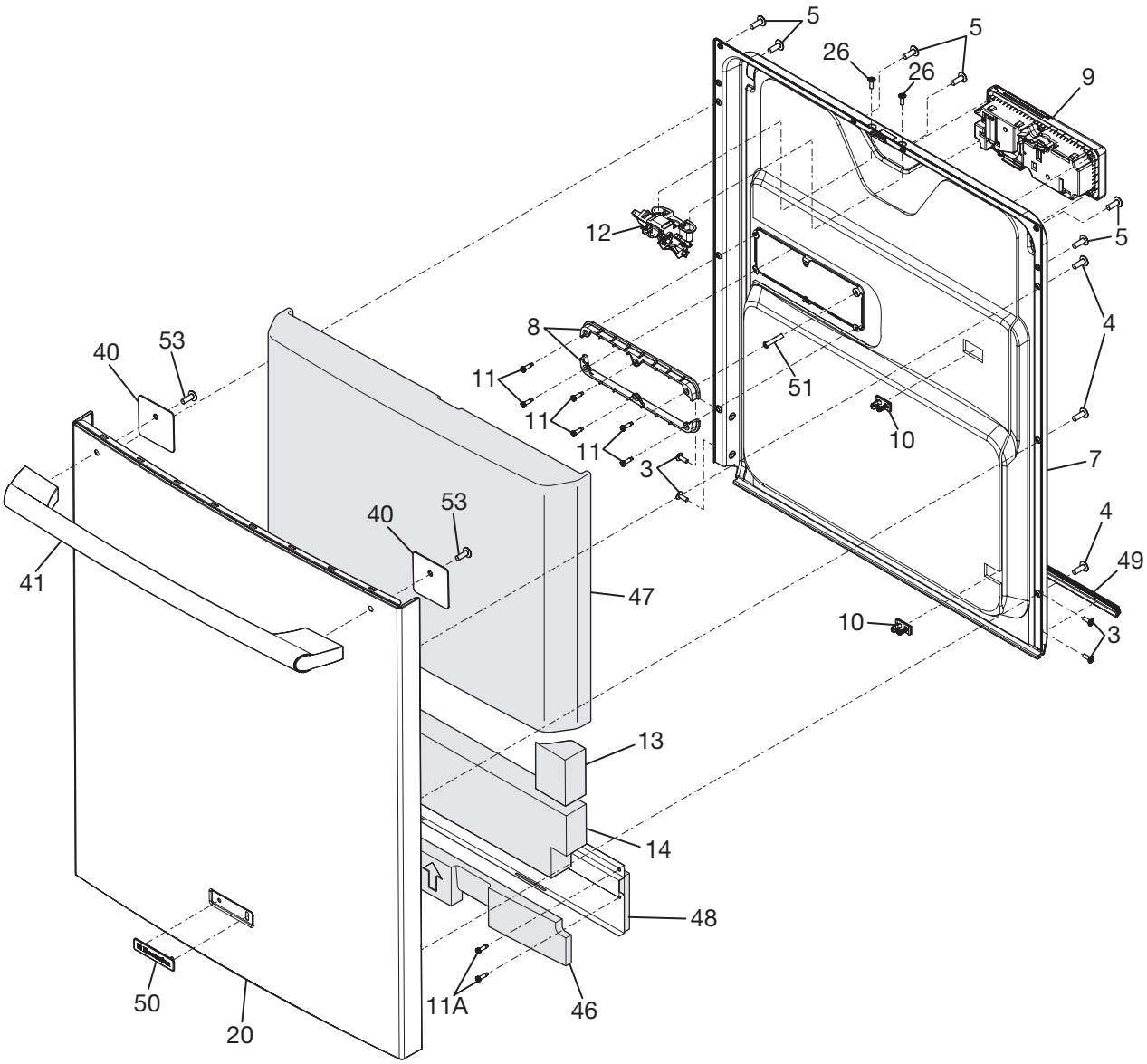

Model Index: A EIDW6305G (EIDW6305GB0)
B EIDW6305G (EIDW6305GS0)
C EIDW6305G (EIDW6305GW0)

Ref #	Part #		Description
3.	7154518201	A B C	Screw, 6 lobe recess, #10-32, (4)
4.	7154603801	A B C	Screw, low profile, truss, (6)
5.	7154603701	A B C	Screw, PH, #10-16 hi-lo, (6), 6 lobe
7.	7154509701	A B C	Liner Assembly, door, inner, w/mastic
8.	7154670901	A B C	Bracket, dispenser mtg., (2)
9.	7154574405	A B C	Dispenser, det/rinse aid, w/reed switch
10.	7154633501	A B C	Clip, wiring harness
11.	7154625702	A B C	Screw, FT PH 6 lobe, #8-18
11A.	7154518301	A B C	Screw, 6 lobe recess, #8-18
12.	7154671401	A B C	Latch Assembly, door, w/shield
13.	7154670701	A B C	Foam, door, sides, (2)
14.	7154623401	A B C	Foam, door
20.	7154616603	A - -	Door, outer, black
20.	7154603501	- B -	Door, outer, stainless
20.	7154616601	- - C	Door, outer, white
26.	7154519101	A B C	Screw, Phlps Hd, #10-16 hi lo, (4)
40.	7154603401	A B C	Plate, handle support, (2)
41.	7241761014	A - -	Handle, door, black
41.	7241761013	- B -	Handle, door, stainless
41.	7241761015	- - C	Handle, door, white
46.	7154690501	A B C	Support, door, bottom
47.	7154672001	A B C	Moisture Barrier, assembly, door, w/data sheet
48.	7154670301	A B C	Reinforcement, assembly, door
49.	7154610601	A B C	Gasket, door bottom
50.	7154658703	A - -	Nameplate, Electrolux, black
50.	7154658705	- B -	Nameplate, Electrolux, stainless
50.	7154658701	- - C	Nameplate, Electrolux, white
51.	7154320301	A B C	Clamp, drip loop, wire
53.	7154633601	A B C	Screw, handle mtg., (2)

Functional Parts
* Non-Illustrated Parts

Electrolux

Upper Frame and Tub Components EIDW6305G

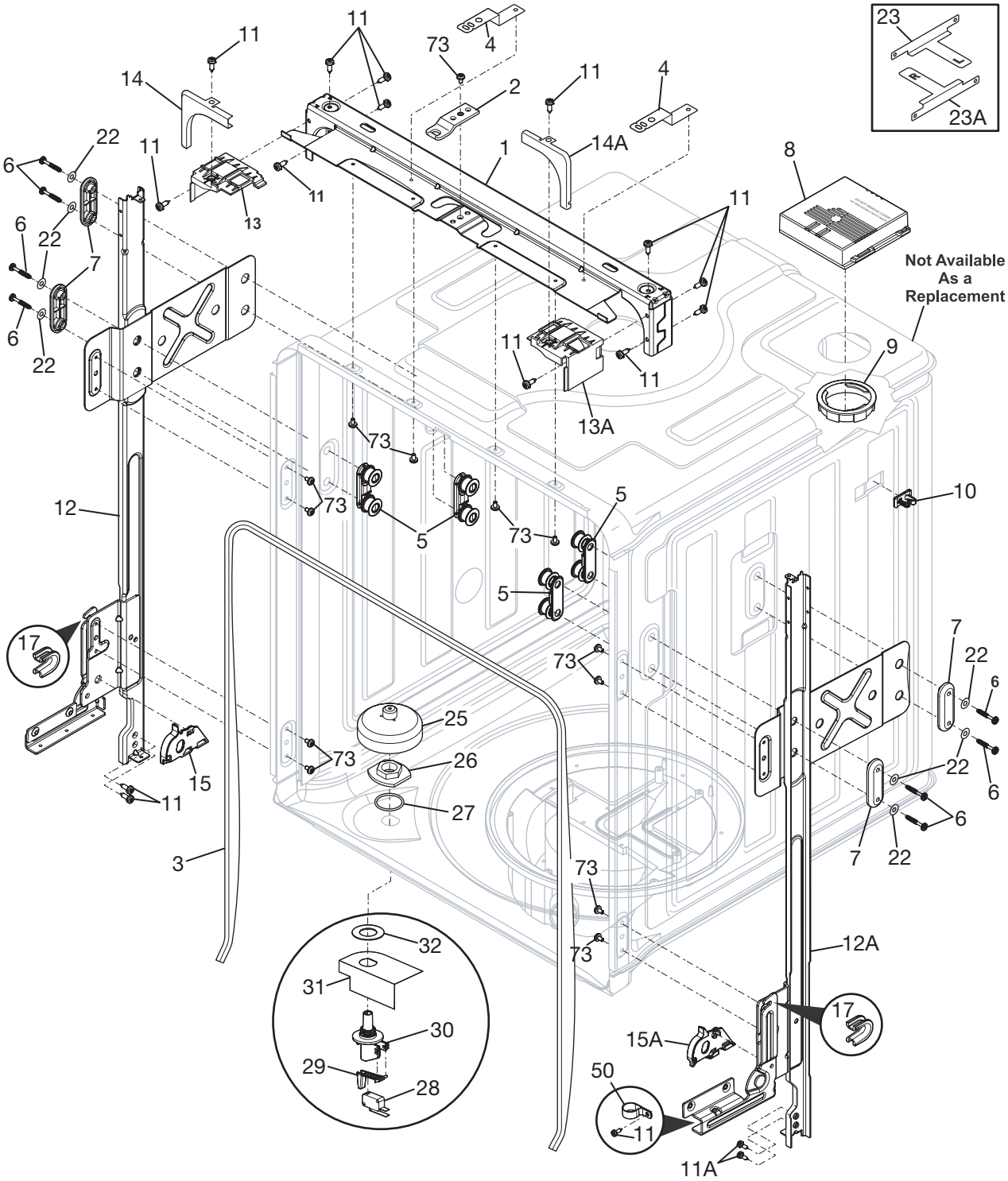

Model Index: A EIDW6305G (EIDW6305GB0)
B EIDW6305G (EIDW6305GS0)
C EIDW6305G (EIDW6305GW0)

Ref #	Part #		Description
1.	7154500701	A B C	Brace, frame, top
2.	7154511401	A B C	Strike, door latch
3.	7154513401	A B C	Gasket, tub
4.	7154657901	A B C	Clip, cabinet mtg., top mount, (2)
4*.	7154657201	A B C	Screw, cabinet clip, (2)
5.	7154510702	A B C	Roller Assembly, tub, (4), w/gasket
6.	7154572801	A B C	Screw, tub roller, (8)
7.	7154510601	A B C	Plate, retainer, outer, (2), tub roller
8#.	7154688501	A B C	Vent Assembly, upper
8*.	7154691601	A B C	Cover, connector, vent assy
9.	7154622601	A B C	Bezel, vent assy, upper
10.	7154633501	A B C	Clip, wiring harness
11.	7154518301	A B C	Screw, 6 lobe recess, #8-18
11A.	7154200701	A B C	Screw, #10-32 x 3/8
12.	7154612901	A B C	Leg and Hinge Assembly, left hand, front
12A.	7154613001	A B C	Leg and Hinge Assembly, right hand, front
13.	7154654401	A B C	Bracket, cabinet clip, LH
13A.	7154654501	A B C	Bracket, cabinet clip, RH
14.	7154502901	A B C	Trim, corner, LH
14A.	7154502001	A B C	Trim, corner, RH
15.	7154656801	A B C	Cover, hinge arm, LH
15A.	7154656901	A B C	Cover, hinge arm, RH
17.	7154671501	A B C	Bushing, hinge arm cable, (2)
22.	75300809968	A B C	Washer
23.	7154654601	A B C	Clip, cabinet mtg., LH
23A.	7154654701	A B C	Clip, cabinet mtg., RH
25.	7154506702	A B C	Float, tub flood
26.	7154506902	A B C	Nut, float switch
27.	7154677201	A B C	Gasket, float switch
28#.	7154507001	A B C	Switch, float
29.	7154517001	A B C	Actuator, float switch
30.	7154506601	A B C	Bracket, float switch
31.	7154657101	A B C	Shield, float bracket
32.	7154506801	A B C	Washer, float switch
50.	7154690101	A B C	Clamp, wiring
73.	7154518401	A B C	Screw, 6 lobe recess, #8-32
* #	7154627701	A B C	Harness, wiring, float switch
*	7154662101	A B C	Cabinet Seal Kit
*	7154623602	A B C	Insulation, blanket
*	7154679701	A B C	Clip, insulation, (2)

Functional Parts
* Non-Illustrated Parts

Electrolux

Motor and Pump Components EIDW6305G

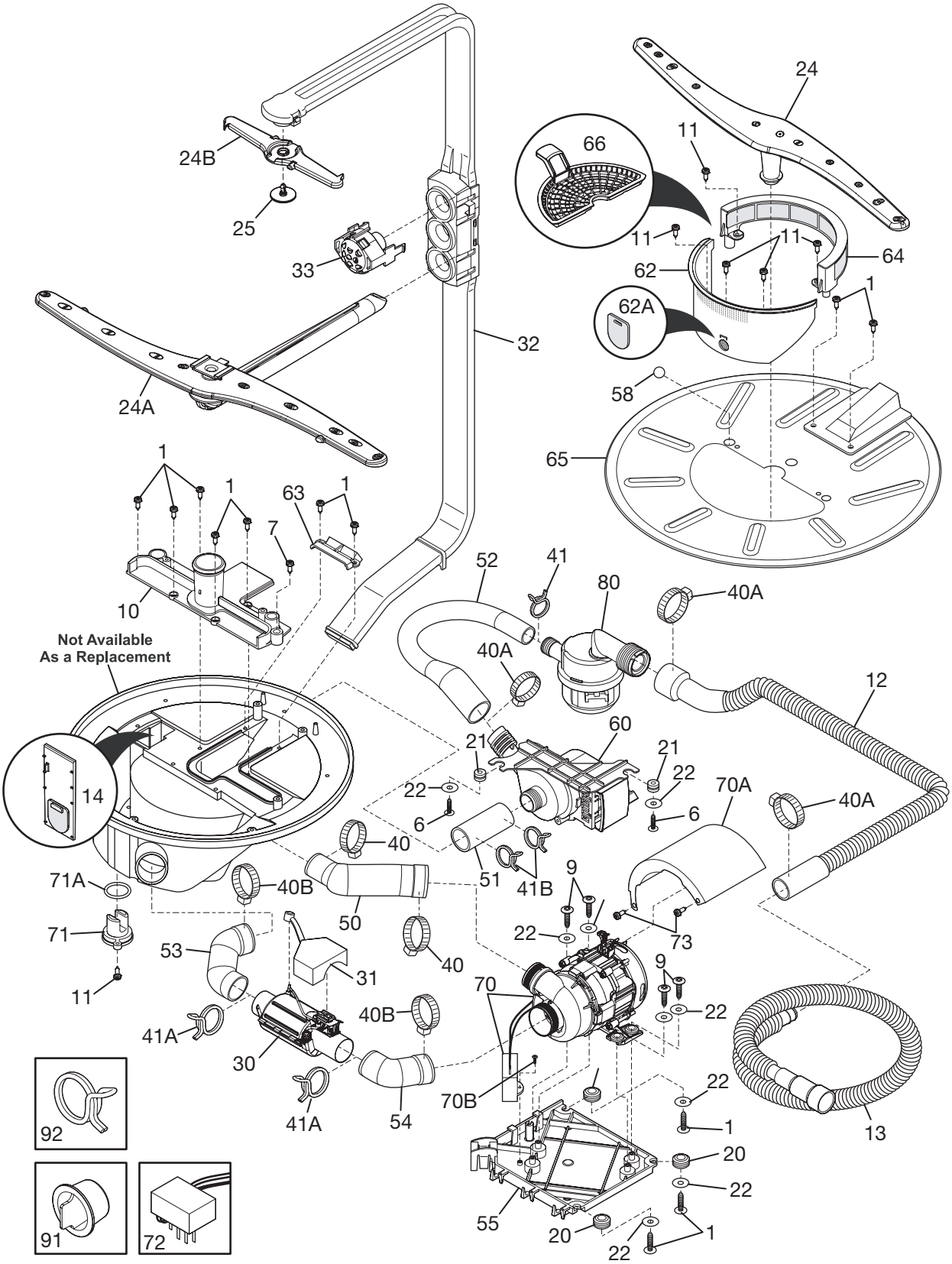

Model Index: A EIDW6305G (EIDW6305GB0)
B EIDW6305G (EIDW6305GS0)
C EIDW6305G (EIDW6305GW0)

Ref #	Part #		Description
1.	7154518001	A B C	Screw, pan head, #10-16 x .8"
6.	7154518301	A B C	Screw, 6 lobe recess, #8-18
7.	7154673501	A B C	Screw, 6 lobe recess, #10 hi lo
9.	7154625701	A B C	Screw, #8-18 hi lo
10.	7154602001	A B C	Support, lower spray arm
11.	75303316032	A B C	Screw, truss ss, 8 .625, (7)
12.	7154654801	A B C	Hose, drain, Intermediate
13.	7154654901	A B C	Hose, drain, main
14.	7154511801	A B C	Check valve, assembly, drain, w/flapper
20.	7154678602	A B C	Grommet, vibration, (3)
21.	7154672502	A B C	Grommet, vibration, (2)
22.	75300809968	A B C	Washer
24.	7154610001	A B C	Spray arm, assembly, lower
24A.	7154508201	A B C	Spray arm, assembly, middle, w/manifold
24B.	7154649502	A B C	Spray arm, assembly, upper
25.	7154650102	A B C	Pin, spray arm, upper
30 #.	7154503701	A B C	Heater, inline, water, 1200W
31.	7154622901	A B C	Cover, inline heater
32.	7154515602	A B C	Tubing Assembly, delivery, w/check valve
33.	7154616502	A B C	Nozzle Assembly, Mid Level
40.	7154106801	A B C	Clamp, hose, 1.29" open, worm gear, (2)
40A.	7154380601	A B C	Clamp, hose, 1.5" open, worm gear, (5)
40B.	7154672601	A B C	Clamp, hose, 1.75" open, worm gear, (2)
41.	7154348401	A B C	Clamp, hose, red, push spring, (3)
41A.	7154611101	A B C	Clamp, SPRING, red, (2)
41B.	7154691501	A B C	Clamp, SPRING, (2)
50.	7154679602	A B C	Hose, sump to, motor, circulation
51.	7154491202	A B C	Hose, sump to, drain pump
52.	7154622402	A B C	Hose, drain pump, to drain valve
53.	7154653201	A B C	Hose, sump to, inline heater
54.	7154653301	A B C	Hose, inline heater, to motor
55.	7154677101	A B C	Plate, motor mounting
58.	7154512401	A B C	Check ball
60.	7154618701	A B C	Pump Assembly, drain, w/bracket
62.	7154600702	A B C	Filter Assembly, vertical, w/flapper
62A.	7154511601	A B C	Flapper, drain check
63.	7154513501	A B C	Cover, delivery tube
64.	7154604502	A B C	Filter Assembly, fine soil, pressurized
65.	7154624901	A B C	Filter Assembly, coarse soil, w/chimney
66.	7154514302	A B C	Trap, glass
70 #.	7154614001	A B C	Motor & Pump Assy, circulation, w/capacitor
70A.	7154656401	A B C	Shield, motor, circulation
70B.	7154614401	A B C	Screw, capacitor mtg.
71 #.	7154473901	A B C	Sensor, turbidity
71*#.	7154627001	A B C	Harness, wiring, turbidity
71A.	7154376001	A B C	O-ring, turbidity
72 #.	7154655901	A B C	Sensor, leak detector
73.	7154518401	A B C	Screw, 6 lobe recess, #8-32
80 #.	7154622001	A B C	Drain Valve, assembly, stepper
91.	7154676701	A B C	Plug, drain hose
92.	7154348502	A B C	Clamp, red, hose

Electrolux

Lower Frame Components EIDW6305G

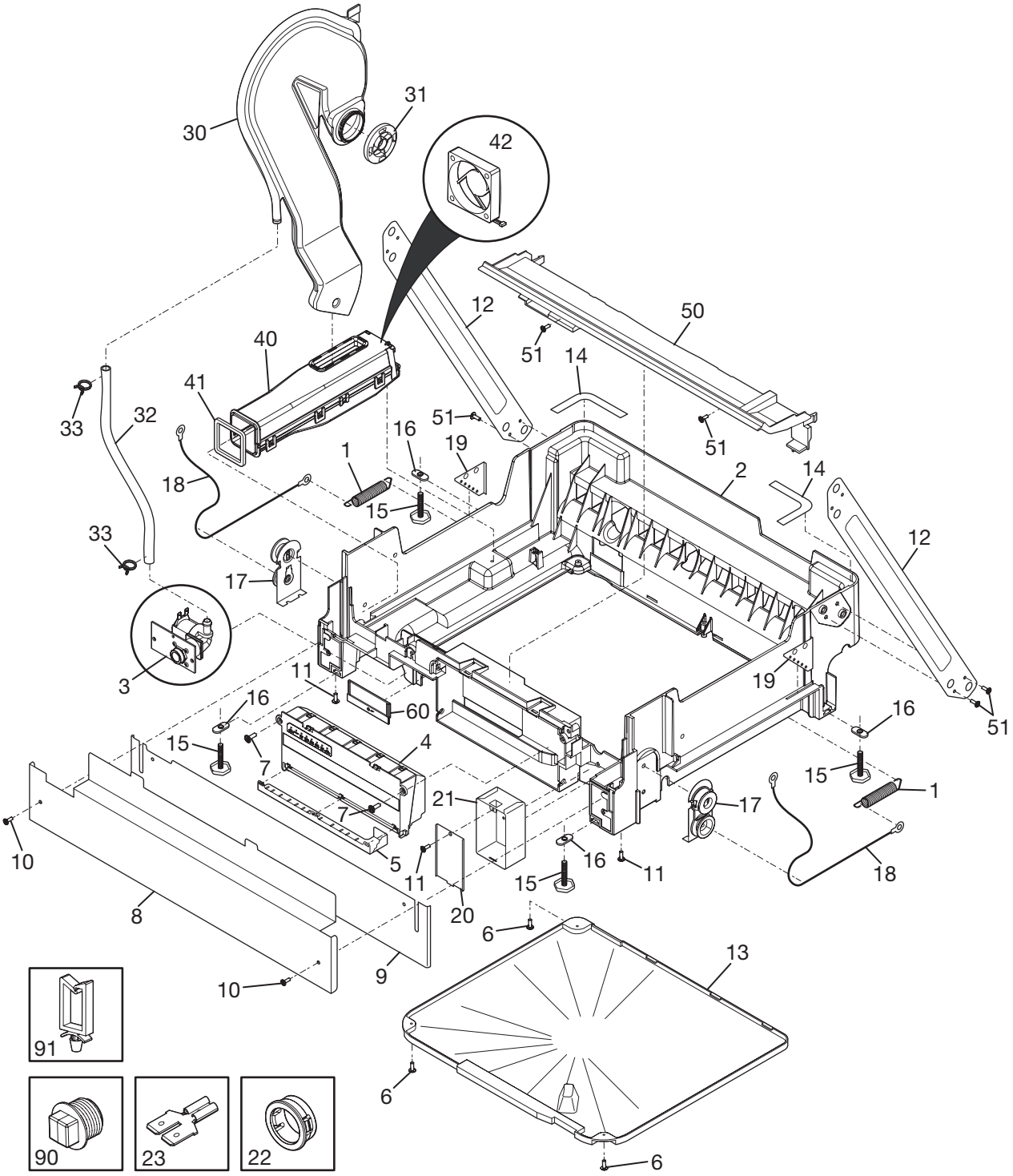

Model Index: A EIDW6305G (EIDW6305GB0)
B EIDW6305G (EIDW6305GS0)
C EIDW6305G (EIDW6305GW0)

Ref #	Part #		Description
1.	7154514801	A B C	Spring, door hinge, (2)
2.	7154502601	A B C	Base, frame mounting
3#.	7154513601	A B C	Valve Assembly, water
3*.	7154689201	A B C	Deflector, valve
4#.	7154515001	A B C	Control Assembly
5.	7154624701	A B C	Bracket, control housing
6.	7154294701	A B C	Screw, #7 plas .375, (6), disp. assy.
7.	7154673501	A B C	Screw, 6 lobe recess, #10 hi lo
8.	7154658003	A - -	Kickplate, black, w/label
8.	7154658005	- B -	Kickplate, stainless, w/label
8.	7154658001	- - C	Kickplate, white, w/label
9.	7154679303	A - -	Toe Plate, adjustable, black, w/damper
9.	7154679305	- B -	Toe Plate, adjustable, stainless, w/damper
9.	7154679301	- - C	Toe Plate, adjustable, white, w/damper
10.	7154371304	A - -	Screw, phillips head, black
10.	7154371307	- B -	Screw, phillips head, silver mist
10.	7154371301	- - C	Screw, phillips head, white
11.	7154518301	A B C	Screw, 6 lobe recess, #8-18
12.	7154501301	A B C	Frame, diagonal, leg, (2)
13.	7154658101	A B C	Tray, base, w/label
14.	7154610301	A B C	Tape, connection, (2), base to tub
15.	7154571101	A B C	Leg, leveling, (4)
16.	7154515401	A B C	Plate, mounting, (4), leveling leg
17.	7154516501	A B C	Bracket Assembly, pulley, (2)
18.	7154658601	A B C	Cable, hinge pulley, (2)
19.	7154514901	A B C	Plate, adjustment, (2), door spring
20.	7154658201	A B C	Cover, junction box, w/label
21.	7154517501	A B C	Box, junction
22.	7154610701	A B C	Grommet, electrical
23.	7154671801	A B C	Connector, ground, 1 female, to 2 male
30.	7154617901	A B C	Duct Assembly, side drying, w/gasket
31.	7154618301	A B C	Cover, drying inlet
32.	7154625001	A B C	Tubing, water inlet
33.	75303318539	A B C	Clamp, tubing, (2)
40#.	7154617601	A B C	Duct Assembly, lower drying, w/motor
41.	7154617801	A B C	Gasket, drying duct, lower
42#.	7154619101	A B C	Motor, drying
50.	7154670401	A B C	Adaptor Plate, assembly, w/foam
51.	7154518001	A B C	Screw, pan head, #10-16 x .8"
60.	7154622701	A B C	Cover, valve service
90.	7154679801	A B C	Plug, water valve
91.	7154690001	A B C	Clip, wiring
* #	7154654001	A B C	Harness, wiring, base, LH side
* #	7154688401	A B C	Harness, wiring, RH side, base
*	7154672301	A B C	Screw, 6 tri lobe, #10 PH, (2)

\# Functional Parts
* Non-Illustrated Parts

Electrolux

Rack Components EIDW6305G

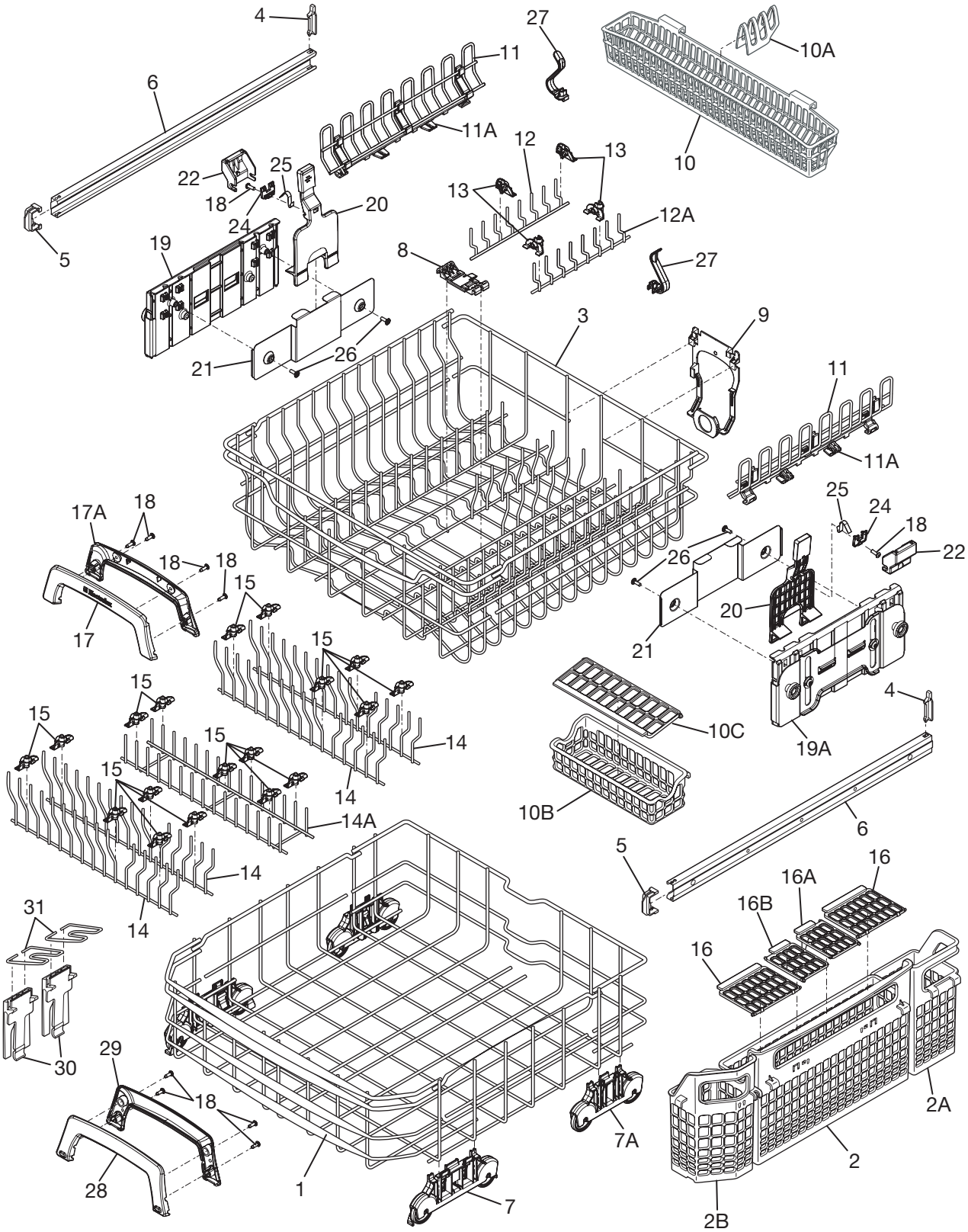

Model Index: A EIDW6305G (EIDW6305GB0)
B EIDW6305G (EIDW6305GS0)
C EIDW6305G (EIDW6305GW0)

Ref #	Part #		Description
1.	7154625401	A B C	Rack Assembly, lower
2.	7154632401	A B C	Basket, silverware, main, center
2A.	7154632601	A B C	Basket, silverware, side, rear
2B.	7154632701	A B C	Basket, silverware, side, front
3.	7154653701	A B C	Rack Assembly, upper
4.	7154510902	A B C	Clip, guide rail, rear, (2)
5.	7154510805	A B C	Cap, guide rail, front, (2)
6.	7154510401	A B C	Guide Rail, upper rack, (2)
7.	7154671301	A B C	Roller Assembly, lower rack, front, (2)
7A.	7154689501	A B C	Roller Assembly, lower rack, rear, (2)
8.	7154610501	A B C	Bracket, spray arm, middle, mounting
9.	7154613402	A B C	Clip, manifold mtg, back
10.	7154581203	A B C	Basket Assy, knife holder
10A.	7154581303	A B C	Holder, snap in
10B.	7154632101	A B C	Tray, utility
10C.	7154652001	A B C	Lid, utility tray
11.	7154629002	A B C	Shelf, cup, upper rack, (2)
11A.	7154629102	A B C	Clip, cup shelf, upper rack, (2)
12.	7154629302	A B C	Fence, fold down, LH center, upper rack
12A.	7154654302	A B C	Fence, fold down, RH center, upper rack
13.	7154629402	A B C	Clip, fold down fence, upper rack, (4)
14.	7154630902	A B C	Fence, fold down, lower rack, (2), single
14A.	7154652402	A B C	Fence, double, lower rack
15.	7154428403	A B C	Bracket, fence, lower rack, (18)
16.	7154631401	A B C	Lid, main basket, side, (2)
16A.	7154632501	A B C	Lid, main basket, LH center
16B.	7154651701	A B C	Lid, main basket, RH center
17.	7154629503	A B C	Handle, front, upper rack, Electrolux
17A.	7154629601	A B C	Handle, back, upper rack
18.	7154629701	A B C	Screw, handle, upper rack, (4)
19.	7154673701	A B C	Plate Assembly, adjustment mech, RH outer, upper rack
19A.	7154673601	A B C	Plate Assembly, adjustment mech, LH outer, upper rack
20.	7154655101	A B C	Actuator Pad, assembly, upper rack, (2), mechanical adj
21.	7154630101	A B C	Plate, adjustment mtg., inner, (2), upper rack
22.	7154630301	A B C	Housing, adjustment mech, upper rack, (2)
24.	7154655201	A B C	Clamp, actuator, upper rack, (2), adjustment mech
25.	7154630201	A B C	Spring, adjustment mech, upper rack, (2)
26.	7154673501	A B C	Screw, 6 lobe recess, #10 hi lo
27.	7154528803	A B C	Clip, cup, (2)
28.	7154631503	A B C	Handle, lower rack, front
29.	7154631601	A B C	Handle, lower rack, back
30.	7154632301	A B C	Clip, holder, champagne, (2)
31.	7154632201	A B C	Holder, champagne glass, (2)

\# Functional Parts
* Non-Illustrated Parts

Control Components EWDW6505G

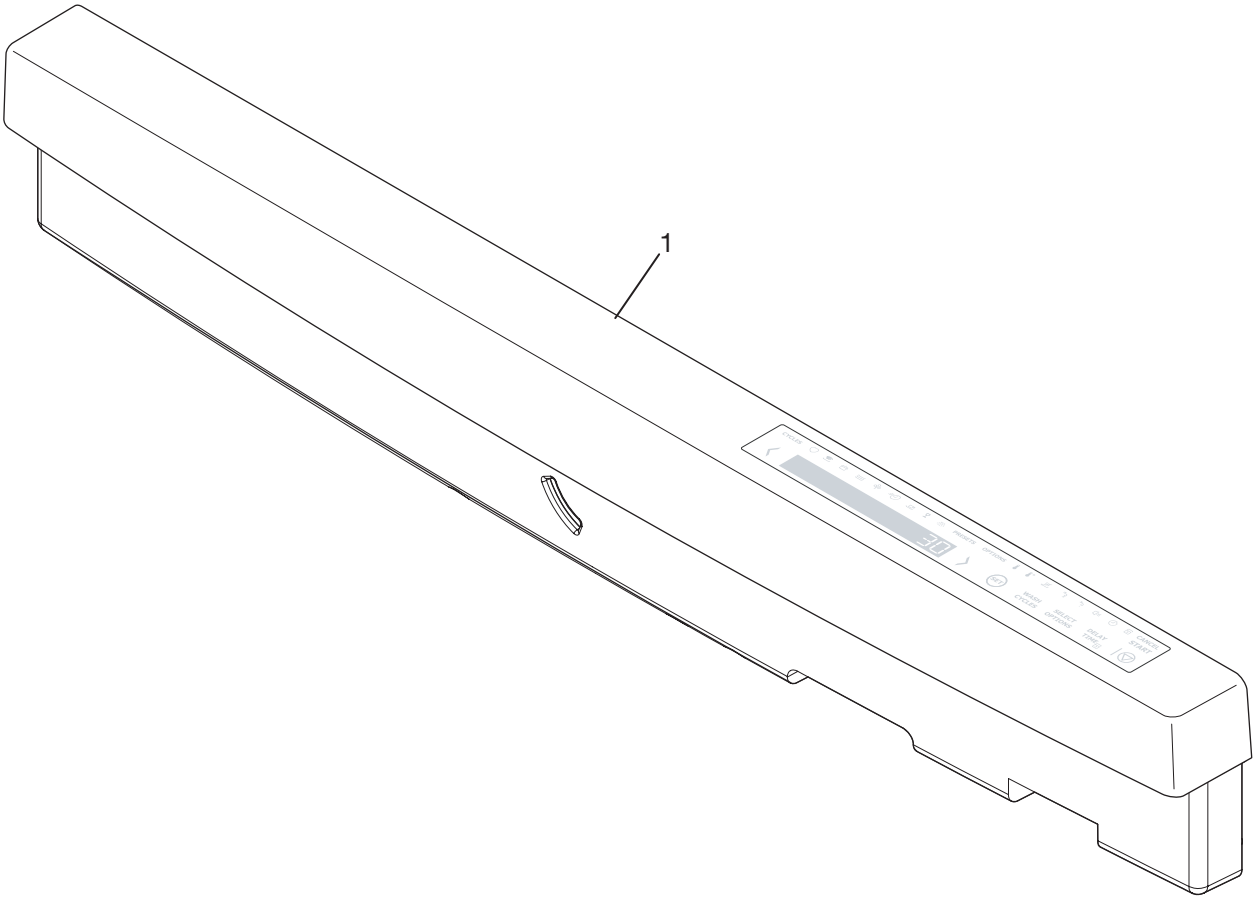

Model Index: A EWDW6505G (EWDW6505GB0)
B EWDW6505G (EWDW6505GS0)
C EWDW6505G (EWDW6505GW0)

Ref #	Part #		Description
1#.	7154611403	A - -	Control Panel Assembly, complete, black, w/controls
1#.	7154611406	- B -	Control Panel Assembly, complete, stainless, w/controls
1#.	7154611401	- - C	Control Panel Assembly, complete, white, w/controls
* #	7154654201	A B C	Harness, wiring, main, control/door
*	7154678401	A B C	Label, energy guide

Functional Parts
* Non-Illustrated Parts

Electrolux

Door Components EWDW6505G

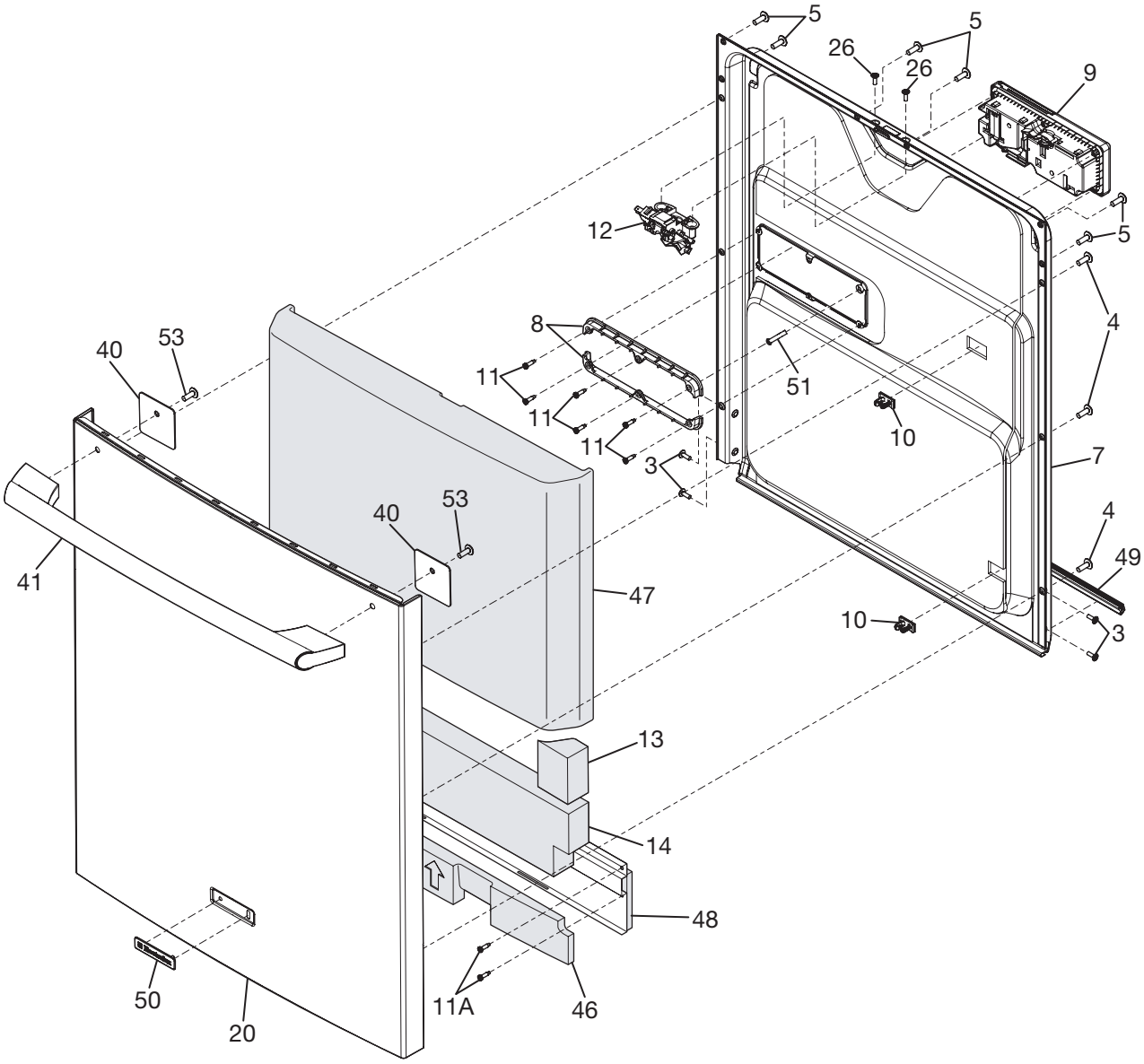

Model Index: A EWDW6505G (EWDW6505GB0)
B EWDW6505G (EWDW6505GS0)
C EWDW6505G (EWDW6505GW0)

Ref #	Part #		Description
3.	7154518201	A B C	Screw, 6 lobe recess, #10-32, (4)
4.	7154603801	A B C	Screw, low profile, truss, (6)
5.	7154603701	A B C	Screw, PH, #10-16 hi-lo, (6), 6 lobe
7.	7154509701	A B C	Liner Assembly, door, inner, w/mastic
8.	7154670901	A B C	Bracket, dispenser mtg., (2)
9.	7154574405	A B C	Dispenser, det/rinse aid, w/reed switch
10.	7154633501	A B C	Clip, wiring harness
11.	7154625702	A B C	Screw, FT PH 6 lobe, #8-18
11A.	7154518301	A B C	Screw, 6 lobe recess, #8-18
12.	7154671401	A B C	Latch Assembly, door, w/shield
13.	7154670701	A B C	Foam, door, sides, (2)
14.	7154623401	A B C	Foam, door
20.	7154616603	A - -	Door, outer, black
20.	7154603501	- B -	Door, outer, stainless
20.	7154616601	- - C	Door, outer, white
26.	7154519101	A B C	Screw, Phlps Hd, #10-16 hi lo, (4)
40.	7154603401	A B C	Plate, handle support, (2)
41.	7241761014	A - -	Handle, door, black
41.	7241761013	- B -	Handle, door, stainless
41.	7241761015	- - C	Handle, door, white
46.	7154690501	A B C	Support, door, bottom
47.	7154672001	A B C	Moisture Barrier, assembly, door, w/data sheet
48.	7154670301	A B C	Reinforcement, assembly, door
49.	7154610601	A B C	Gasket, door bottom
50.	7154658703	A - -	Nameplate, Electrolux, black
50.	7154658705	- B -	Nameplate, Electrolux, stainless
50.	7154658701	- - C	Nameplate, Electrolux, white
51.	7154320301	A B C	Clamp, drip loop, wire
53.	7154633601	A B C	Screw, handle mtg., (2)

Functional Parts
* Non-Illustrated Parts

Electrolux

Upper Frame and Tub Components EWDW6505G

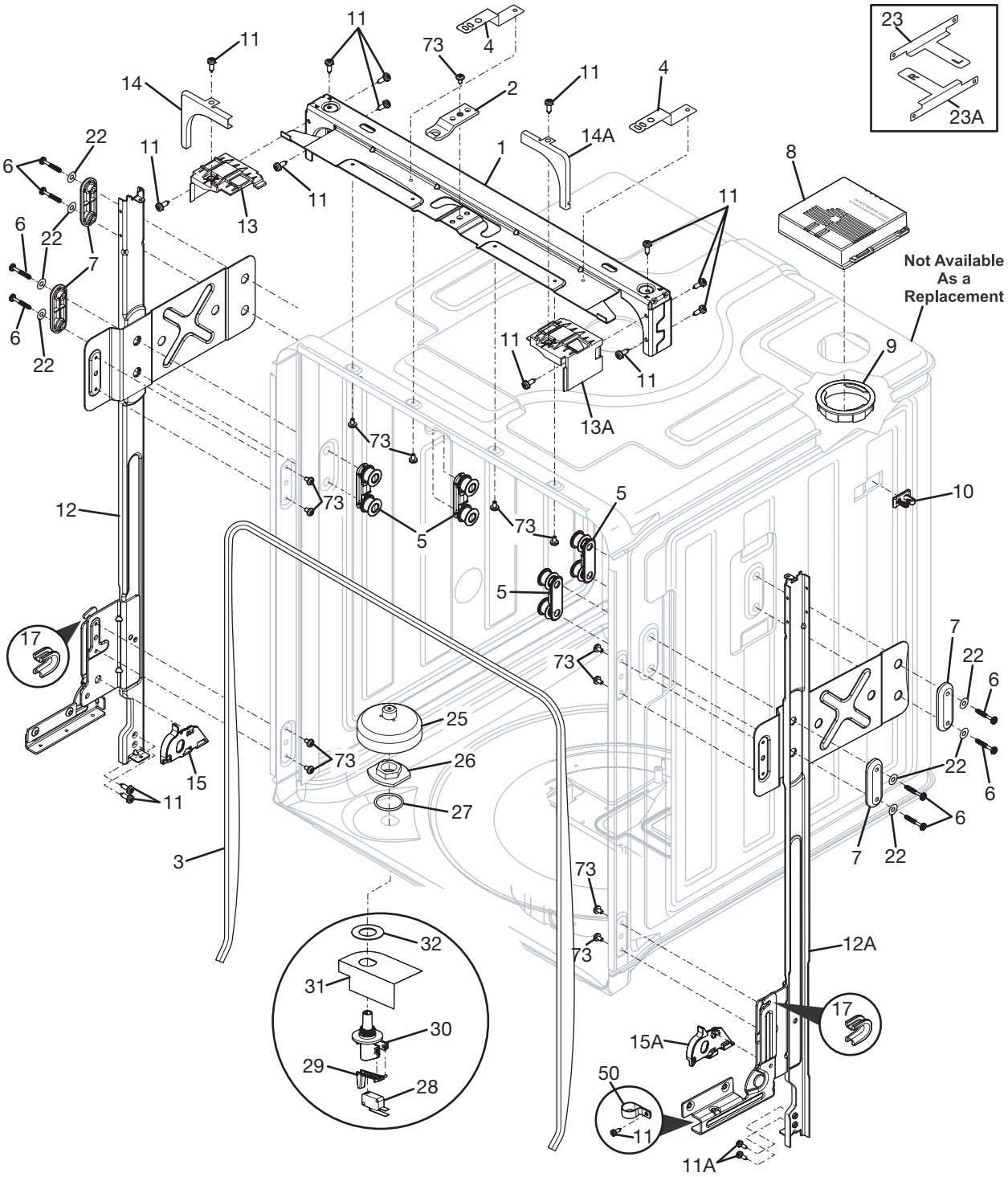

Model Index: A EWDW6505G (EWDW6505GB0)
B EWDW6505G (EWDW6505GS0)
C EWDW6505G (EWDW6505GW0)

Ref #	Part #		Description
1.	7154500701	A B C	Brace, frame, top
2.	7154511401	A B C	Strike, door latch
3.	7154513401	A B C	Gasket, tub
4.	7154657901	A B C	Clip, cabinet mtg., top mount, (2)
4*.	7154657201	A B C	Screw, cabinet clip, (2)
5.	7154510702	A B C	Roller Assembly, tub, (4), w/gasket
6.	7154572801	A B C	Screw, tub roller, (8)
7.	7154510601	A B C	Plate, retainer, outer, (2), tub roller
8#.	7154688501	A B C	Vent Assembly, upper
8*.	7154691601	A B C	Cover, connector, vent assy
9.	7154622601	A B C	Bezel, vent assy, upper
10.	7154633501	A B C	Clip, wiring harness
11.	7154518301	A B C	Screw, 6 lobe recess, #8-18
11A.	7154200701	A B C	Screw, #10-32 x 3/8
12.	7154612901	A B C	Leg and Hinge Assembly, left hand, front
12A.	7154613001	A B C	Leg and Hinge Assembly, right hand, front
13.	7154654401	A B C	Bracket, cabinet clip, LH
13A.	7154654501	A B C	Bracket, cabinet clip, RH
14.	7154502901	A B C	Trim, corner, LH
14A.	7154502001	A B C	Trim, corner, RH
15.	7154656801	A B C	Cover, hinge arm, LH
15A.	7154656901	A B C	Cover, hinge arm, RH
17.	7154671501	A B C	Bushing, hinge arm cable, (2)
22.	75300809968	A B C	Washer
23.	7154654601	A B C	Clip, cabinet mtg., LH
23A.	7154654701	A B C	Clip, cabinet mtg., RH
25.	7154506702	A B C	Float, tub flood
26.	7154506902	A B C	Nut, float switch
27.	7154677201	A B C	Gasket, float switch
28#.	7154507001	A B C	Switch, float
29.	7154517001	A B C	Actuator, float switch
30.	7154506601	A B C	Bracket, float switch
31.	7154657101	A B C	Shield, float bracket
32.	7154506801	A B C	Washer, float switch
50.	7154690101	A B C	Clamp, wiring
73.	7154518401	A B C	Screw, 6 lobe recess, #8-32
* #	7154627701	A B C	Harness, wiring, float switch
*	7154662101	A B C	Cabinet Seal Kit
*	7154623602	A B C	Insulation, blanket
*	7154679701	A B C	Clip, insulation, (2)

Functional Parts
* Non-Illustrated Parts

Electrolux

Motor and Pump Components EWDW6505G

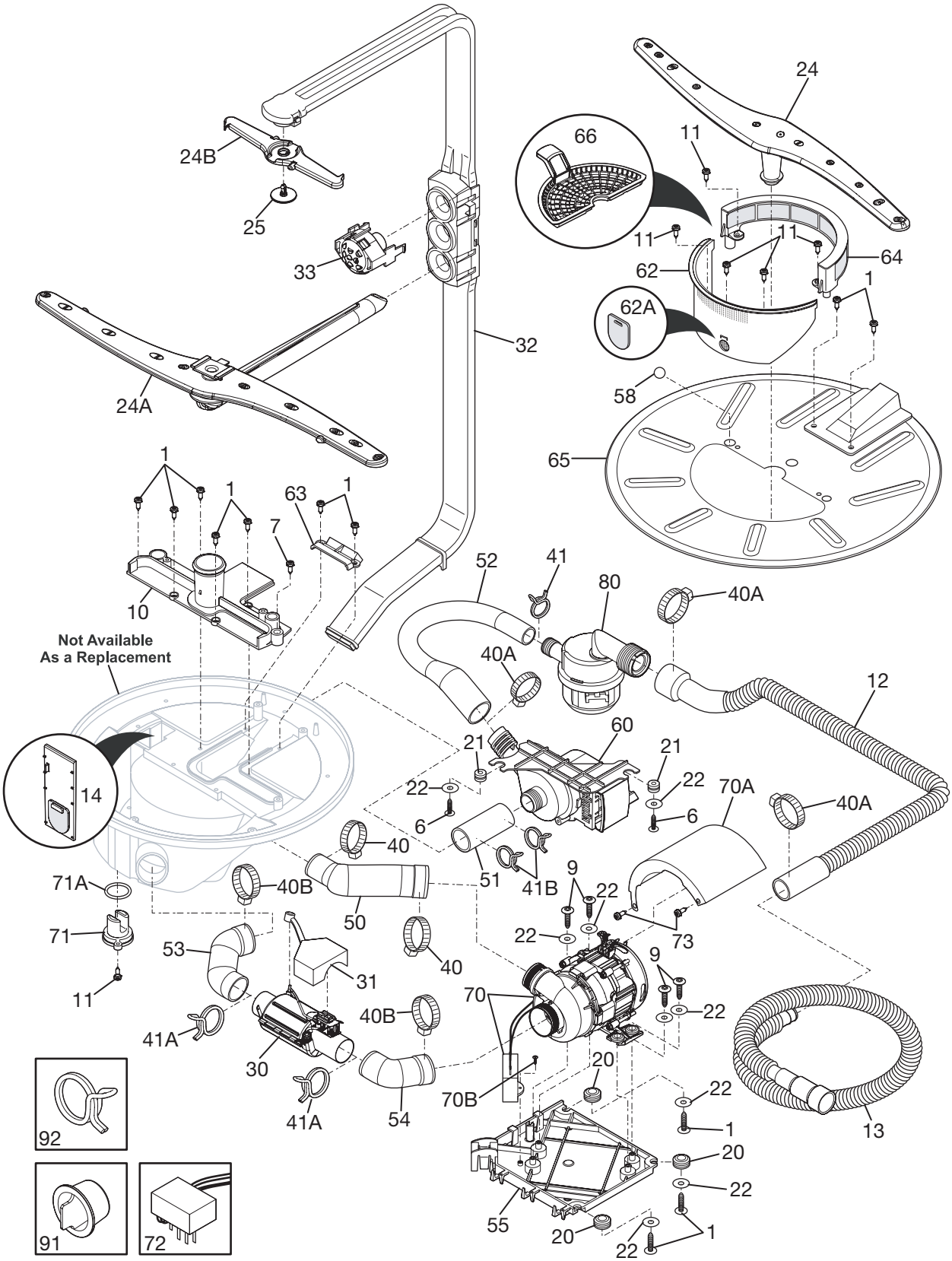

Model Index: A EWDW6505G (EWDW6505GB0)
B EWDW6505G (EWDW6505GS0)
C EWDW6505G (EWDW6505GW0)

Ref #	Part #		Description
1.	7154518001	A B C	Screw, pan head, #10-16 x .8"
6.	7154518301	A B C	Screw, 6 lobe recess, #8-18
7.	7154673501	A B C	Screw, 6 lobe recess, #10 hi lo
9.	7154625701	A B C	Screw, #8-18 hi lo
10.	7154602001	A B C	Support, lower spray arm
11.	75303316032	A B C	Screw, truss ss, 8 .625, (7)
12.	7154654801	A B C	Hose, drain, Intermediate
13.	7154654901	A B C	Hose, drain, main
14.	7154511801	A B C	Check valve, assembly, drain, w/flapper
20.	7154678602	A B C	Grommet, vibration, (3)
21.	7154672502	A B C	Grommet, vibration, (2)
22.	75300809968	A B C	Washer
24.	7154610001	A B C	Spray arm, assembly, lower
24A.	7154508201	A B C	Spray arm, assembly, middle, w/manifold
24B.	7154649502	A B C	Spray arm, assembly, upper
25.	7154650102	A B C	Pin, spray arm, upper
30#.	7154503701	A B C	Heater, inline, water, 1200W
31.	7154622901	A B C	Cover, inline heater
32.	7154515602	A B C	Tubing Assembly, delivery, w/check valve
33.	7154616502	A B C	Nozzle Assembly, Mid Level
40.	7154106801	A B C	Clamp, hose, 1.29" open, worm gear, (2)
40A.	7154380601	A B C	Clamp, hose, 1.5" open, worm gear, (5)
40B.	7154672601	A B C	Clamp, hose, 1.75" open, worm gear, (2)
41.	7154348401	A B C	Clamp, hose, red, push spring, (3)
41A.	7154611101	A B C	Clamp, SPRING, red, (2)
41B.	7154691501	A B C	Clamp, SPRING, (2)
50.	7154679602	A B C	Hose, sump to, motor, circulation
51.	7154491202	A B C	Hose, sump to, drain pump
52.	7154622402	A B C	Hose, drain pump, to drain valve
53.	7154653201	A B C	Hose, sump to, inline heater
54.	7154653301	A B C	Hose, inline heater, to motor
55.	7154677101	A B C	Plate, motor mounting
58.	7154512401	A B C	Check ball
60.	7154618701	A B C	Pump Assembly, drain, w/bracket
62.	7154600702	A B C	Filter Assembly, vertical, w/flapper
62A.	7154511601	A B C	Flapper, drain check
63.	7154513501	A B C	Cover, delivery tube
64.	7154604502	A B C	Filter Assembly, fine soil, pressurized
65.	7154624901	A B C	Filter Assembly, coarse soil, w/chimney
66.	7154514302	A B C	Trap, glass
70 #.	7154614001	A B C	Motor & Pump Assy, circulation, w/capacitor
70A.	7154656401	A B C	Shield, motor, circulation
70B.	7154614401	A B C	Screw, capacitor mtg.
71 #.	7154473901	A B C	Sensor, turbidity
71*#.	7154627001	A B C	Harness, wiring, turbidity
71A.	7154376001	A B C	O-ring, turbidity
72 #.	7154655901	A B C	Sensor, leak detector
73.	7154518401	A B C	Screw, 6 lobe recess, #8-32
80#.	7154622001	A B C	Drain Valve, assembly, stepper
91.	7154676701	A B C	Plug, drain hose
92.	7154348502	A B C	Clamp, red, hose

Electrolux

Lower Frame Components EWDW6505G

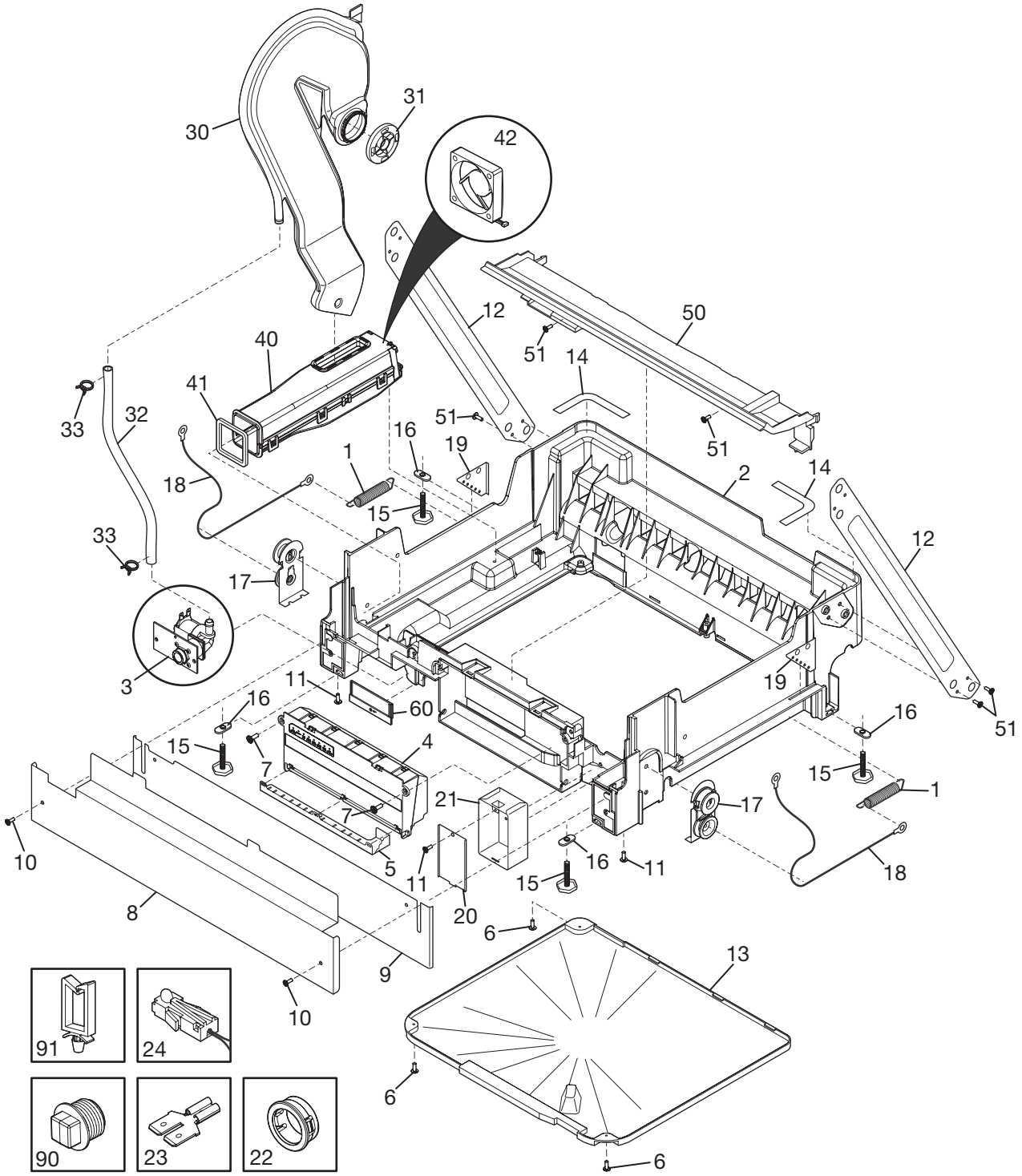

Model Index: A EWDW6505G (EWDW6505GB0)
B EWDW6505G (EWDW6505GS0)
C EWDW6505G (EWDW6505GW0)

Ref #	Part #		Description
1	7154514801	A B C	Spring, door hinge, (2)
2	7154502601	A B C	Base, frame mounting
3 #	7154513601	A B C	Valve Assembly, water
3*	7154689201	A B C	Deflector, valve
4 #	7154515001	A B C	Control Assembly
5	7154624701	A B C	Bracket, control housing
6	7154294701	A B C	Screw, #7 plas .375, (6), disp. assy.
7	7154673501	A B C	Screw, 6 lobe recess, #10 hi lo
8	7154658003	A - -	Kickplate, black, w/label
8	7154658005	- B -	Kickplate, stainless, w/label
8	7154658001	- - C	Kickplate, white, w/label
9	7154679303	A - -	Toe Plate, adjustable, black, w/damper
9	7154679305	- B -	Toe Plate, adjustable, stainless, w/damper
9	7154679301	- - C	Toe Plate, adjustable, white, w/damper
10	7154371304	A - -	Screw, phillips head, black
10	7154371307	- B -	Screw, phillips head, silver mist
10	7154371301	- - C	Screw, phillips head, white
11	7154518301	A B C	Screw, 6 lobe recess, #8-18
12	7154501301	A B C	Frame, diagonal, leg, (2)
13	7154658101	A B C	Tray, base, w/label
14	7154610301	A B C	Tape, connection, (2), base to tub
15	7154571101	A B C	Leg, leveling, (4)
16	7154515401	A B C	Plate, mounting, (4), leveling leg
17	7154516501	A B C	Bracket Assembly, pulley, (2)
18	7154658601	A B C	Cable, hinge pulley, (2)
19	7154514901	A B C	Plate, adjustment, (2), door spring
20	7154658201	A B C	Cover, junction box, w/label
21	7154517501	A B C	Box, junction
22	7154610701	A B C	Grommet, electrical
23	7154671801	A B C	Connector, ground, 1 female, to 2 male
24 #	7154657501	A B C	Light Assembly, cleaning
30	7154617901	A B C	Duct Assembly, side drying, w/gasket
31	7154618301	A B C	Cover, drying inlet
32	7154625001	A B C	Tubing, water inlet
33	75303318539	A B C	Clamp, tubing, (2)
40 #	7154617601	A B C	Duct Assembly, lower drying, w/motor
41	7154617801	A B C	Gasket, drying duct, lower
42 #	7154619101	A B C	Motor, drying
50	7154670401	A B C	Adaptor Plate, assembly, w/foam
51	7154518001	A B C	Screw, pan head, #10-16 x .8"
60	7154622701	A B C	Cover, valve service
90	7154679801	A B C	Plug, water valve
91	7154690001	A B C	Clip, wiring
* #	7154654001	A B C	Harness, wiring, base, LH side
* #	7154688401	A B C	Harness, wiring, RH side, base
*	7154672301	A B C	Screw, 6 tri lobe, #10 PH, (2)

Functional Parts
* Non-Illustrated Parts

Electrolux

Rack Components EWDW6505G

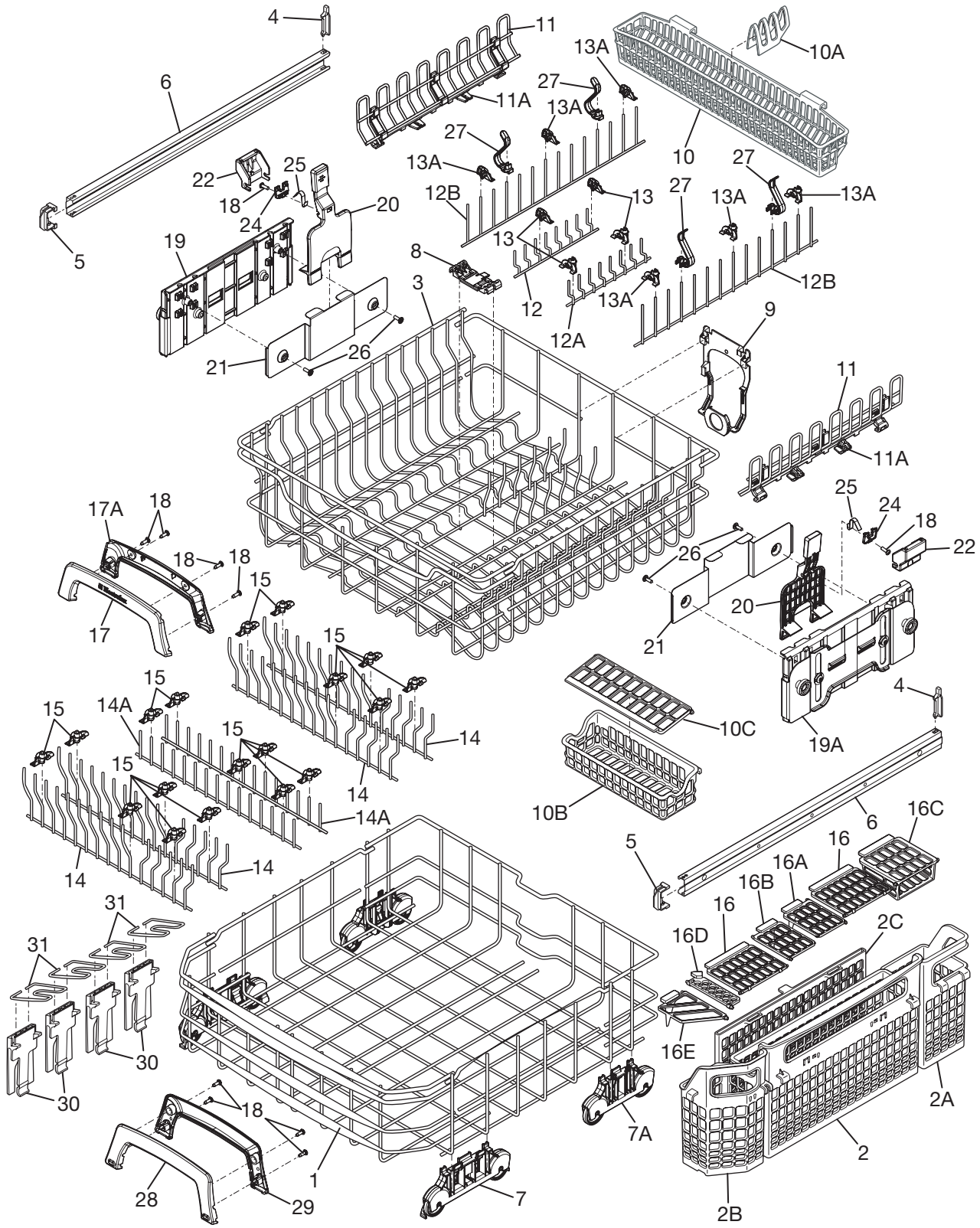

Model Index: A EWDW6505G (EWDW6505GB0)
B EWDW6505G (EWDW6505GS0)
C EWDW6505G (EWDW6505GW0)

Ref #	Part #		Description
1.	7154625401	A B C	Rack Assembly, lower
2.	7154632401	A B C	Basket, silverware, main, center
2A.	7154632601	A B C	Basket, silverware, side, rear
2B.	7154632701	A B C	Basket, silverware, side, front
2C.	7154653001	A B C	Holder, silverware, flexible
3.	7154625301	A B C	Rack Assembly, upper
4.	7154510902	A B C	Clip, guide rail, rear, (2)
5.	7154510805	A B C	Cap, guide rail, front, (2)
6.	7154510401	A B C	Guide Rail, upper rack, (2)
7.	7154671301	A B C	Roller Assembly, lower rack, front, (2)
7A.	7154689501	A B C	Roller Assembly, lower rack, rear, (2)
8.	7154610501	A B C	Bracket, spray arm, middle, mounting
9.	7154613402	A B C	Clip, manifold mtg, back
10.	7154581203	A B C	Basket Assy, knife holder
10A.	7154581303	A B C	Holder, snap in
10B.	7154632101	A B C	Tray, utility
10C.	7154652001	A B C	Lid, utility tray
11.	7154629002	A B C	Shelf, cup, upper rack, (2)
11A.	7154629102	A B C	Clip, cup shelf, upper rack, (2)
12.	7154629302	A B C	Fence, fold down, LH center, upper rack
12A.	7154654302	A B C	Fence, fold down, RH center, upper rack
12B.	7154652102	A B C	Fence, fold down, upper rack
13.	7154629402	A B C	Clip, fold down fence, upper rack, (4)
13A.	7154652202	A B C	Clip, fence, upper rack
14.	7154630902	A B C	Fence, fold down, lower rack, (2), single
14A.	7154631102	A B C	Fence, fold down, lower rack, (2)
15.	7154428403	A B C	Bracket, fence, lower rack, (18)
16.	7154631401	A B C	Lid, main basket, side, (2)
16A.	7154632501	A B C	Lid, main basket, LH center
16B.	7154651701	A B C	Lid, main basket, RH center
16C.	7154649001	A B C	Lid, basket, knife
16D.	7154651801	A B C	Lid, basket, chopsticks
16E.	7154634901	A B C	Lid, basket, RH side
17.	7154629503	A B C	Handle, front, upper rack, Electrolux
17A.	7154629601	A B C	Handle, back, upper rack
18.	7154629701	A B C	Screw, handle, upper rack, (4)
19.	7154673701	A B C	Plate Assembly, adjustment mech, RH outer, upper rack
19A.	7154673601	A B C	Plate Assembly, adjustment mech, LH outer, upper rack
20.	7154655101	A B C	Actuator Pad, assembly, upper rack, (2), mechanical adj
21.	7154630101	A B C	Plate, adjustment mtg., inner, (2), upper rack
22.	7154630301	A B C	Housing, adjustment mech, upper rack, (2)
24.	7154655201	A B C	Clamp, actuator, upper rack, (2), adjustment mech
25.	7154630201	A B C	Spring, adjustment mech, upper rack, (2)
26.	7154673501	A B C	Screw, 6 lobe recess, #10 hi lo
27.	7154528803	A B C	Clip, cup, (2)
28.	7154631503	A B C	Handle, lower rack, front
29.	7154631601	A B C	Handle, lower rack, back
30.	7154632301	A B C	Clip, holder, champagne, (2)
31.	7154632201	A B C	Holder, champagne glass, (2)

Electrolux

Notes

Section 6

Troubleshooting

Problem	Cause	Correction
Dishwasher will not operate when turned on. No lights on top of console.	1. Fuse (blown or tripped). 2. 120 VAC supply wiring connection faulty. 3. Electronic control board faulty. 4. Door switch (open contacts). 5. User may have locked out display.	1. Replace fuse or reset breaker. 2. Repair or replace wire fasteners at dishwasher junction box. Check power to unit from house power supply. 3. Check power at the control from the j-box. Kill power to unit and re power looking for lights or failure code. Replace defective control board. 4. Lights on console go out when door is closed, if the door switch does not open the lights may not come on. Replace defective door switch. 5. Press and hold left arrow on EWDW6505G for 5 seconds to relight console lights.
Dishwasher will not operate when turned on. No lights on top of console.	1. Customer not programming unit properly. 2. Door switch not opening. 3. Wires loose on control. 4. Defective electronic control. 5. Key pad not programming control.	1. Instruct customer in operation of dishwasher. 2. If the door switch is not opening and closing properly the control may not know the door is closed to start unit. 3. Check all wire to the electronic control. 4. If control is wired properly and not starting unit the electronic control may need to be replaced. 5. Replace defective key pad.
Dishwasher will not fill with water.	1. Water not turned on. 2. Dishwasher not programmed properly. 3. Fill hose from valve to left side air duct kinked or pinched. 4. Stopped up water valve. 5. Water valve not opening.	1. Check water supply to dishwasher. 2. Instruct customer in operation of dishwasher. 3. Check hose to be sure it is not kinked or pinched off. Replace if needed. 4. Check screen in water valve for debris, clean the valve or replace if needed. 5a. Check float and float switch for proper operation. Replace if needed. 5b. Check wire at electronic control and at water valve to make sure both are connected properly. 5c. Check for power from control to valve Replace water valve if needed.
Wash motor stops in cycle.	1. Motor loosing power. 2. Debris in wash pump stalling motor. 3. Motor shutting down on overload. 4. Control not receiving proper input from tachometer. 5. Control not interpreting input from tachometer.	1. Check wire connection at control and motor 2. Clean wash pump and filters. 3. Check voltage. Rotate motor fan or impeller. Replace motor. 4. Check electrical connections. Replace motor. 5. Check electrical connections. Replace control.

Problem	Cause	Correction
Dishwasher runs but will not heat. Water in tub is cool.	1. Incoming water not hot enough. 2. Heater is not operating.	1a. Recommend incoming water temperature is 120°F. Water needs to be run at sink closest to dishwasher before starting a wash cycle. 1b. Check hot water heater setting. 2a. Test heater element. Replace if needed. 2b. Check disconnect plugs at heater and control. Replace defective components. ***NOTE:*** *DO NOT OPERATE HEATER WITHOUT WATER IN THE TUB.* 3. Check cycle chart for power up of heater. Replace control if defective.
Dispenser is not opening.	1. Cup was wet when detergent was added to dispenser 2. Linkage not moving. 3. Wax motor not extending. 4. No power to dispenser. 5. Broken spring(s). 6. Defective actuator.	1. Water in the cup can cause detergent to cake and hang up cover. 2. Check alignment of dispenser linkage. 3. Check operation of wax motor with power applied. 4. Check connections to dispenser and at control. 5. Replace dispenser. 6. Replace actuator.
Dishwasher will not pump out water.	1. House drain restricted. 2. Drain hose stopped up. 3. Sump stopped up with debris. 4. Drain valve stopped up. 5. Drain pump stopped up. 6. Drain valve not opening.	1. Remove drain hose from house drain and check for blockage. 2. Remove drain hose and check for restriction 3. Remove sump lift out filter cover and clean sump. 4. Remove and clean valve. 5. Remove and clean drain pump. 6a. Check wire connections to valve and at control. 6b. If power is at the drain valve, replace defective drain valve. 6c. If no power at the drain valve, replace defective control. 6d. Check wire connections to drain pump and at control. 6e. If power is at drain pump. Replace defective drain pump. 6f. If no power at the drain pump , replace defective control.
Cycle not advancing	1. Water not hot enough. 2. Dishes have too much debris	1. Incoming water needs to be 120°F 2. A very dirty load may have the wash time extended by the turbidity sensor.
Wash cycle running a very long time.	1. Control not advancing as programmed. 2. Loose wire connections at control.	1. See service data sheet to check timing of control. Replace control if defective. 2. Check wire connections a control.

Problem	Cause	Correction
Water in the tub is not staying at the proper level.	1. The drain valve is not closed properly. 2. Drain hose not installed properly.	1a. Check and clean the drain valve. 1b. Check power to the drain valve from the control to make sure the valve is closed. 1c. Check the motor of the drain valve for resistance. Replace defective drain valve. 2a. The drain hose needs to loop all the way to the underside of the counter top. 2b. The drain hose should not go under the floor with out an air gap mounted in the counter top.
At the end of the cycle there is still detergent in the dispenser.	1. The cover for the dispenser did not open. 2. The detergent was added when the cup was wet. 3. The water was not hot enough to dissolve detergent. 4. Dishwasher did not fill with the proper amount of water. 5. Detergent not handled or stored properly.	1. See Problem: Dispenser is not opening. 2. Water can cause detergent to cake and not dissolve properly. Close the cup cover before adding fresh detergent to the cup. 3. See Problem: Dishwasher operates but water not getting hot. 4. See Problem: Will not fill. 5. Make sure detergent is fresh and stored in an air tight container in a dry location.
Dishwasher does not perform all functions in the chosen cycle.	1. Check cycle criteria found in the Service data sheet.	1. The cycle matrix is different for each cycle and the control can change the cycle with input from sensors.
Dishwasher only fills and drains. Can not hear the wash motor running.	1. The wash motor may not be operating.	1. See Problem: Wash motor not operating.
At the end of the cycle dishes are not dry.	1. Type of dishes that make up the load. 2. Dishwasher installed in closed cabinetry. 3. Incoming water not hot enough. 4. The rinse aid dispenser is empty. 5. Rinse aid is not being dispensed in the cycle.	1. Plastic items do not dry well in dishwashers. 2. Ample outside air is needed for intake of vent system. 3. Check incoming water temperature needs to be at least 120°F. 4. Rinse aid is needed to speed evaporation of water from the dishes. Fill rinse aid section of the dispenser. Check setting of dispenser and increase setting to aid in drying. 5. See Problem: Dispenser is not opening.

Problem	Cause	Correction
At the end of the cycle dishes are not dry.	1. Upper vent assembly is not opening.	1. Check vent for restrictions top right rear of tub. 2. Check connections at vent and at control. 3. Check power to vent at control. If power is at vent assembly replace defective vent assembly.
	1. No exhaust air opening. 2. Vent fan not operating.	1. Make sure opening for air exhaust in the toe kick is open. 2a. Check vent for restrictions left side of base. 2b. Check connections at fan motor and at control. 2c. Check power to fan motor at control. No power to fan motor, replace control. Power to fan motor, replace fan motor.
Dishwasher is showing a code in the display.	1. Code can be displayed to inform the customer of a condition in the product.	1. Refer to information in the Owners guide, service data sheet and service manual for understanding the code.
Lights flashing	1. This is to inform the customer of a condition in the product. 2. A failure has occurred in the product.	1. Reset the control by cycling power to the product. 2a. Check wire connection at the j-box. 2b. Check all connections at the control.
Can not select a wash cycle or options.	1. Key pad is not lighting up. 2. Customer is trying to select an option not available for the wash cycle.	1. Check connections at keypad and control. If no power to keypad replace control. 2. Refer customer to Owners manual.

Electrolux

Error Code Table for Models EWDW6505G & EIDW6305G

Model	Error Code Shown in Display or Read Out	Error Type	Reason
EWDW6505G	Error 1	Leak Detector	Water has been detected under the tub.
EIDW6305G	Alternating “Er” & “01”		
EWDW6505G	Error 2	Thermistor	When thermistor/ turbidity module fails.
EIDW6305G	Alternating “Er” & “02”		
EWDW6505G	Error 3	Wash Pump	Dead wash motor.
EIDW6305G	Alternating “Er” & “03”		
EWDW6505G	Error 4	Drying Damper	Dead drying damper.
EIDW6305G	Alternating “Er” & “04”		
EWDW6505G	Error 5	Upper Fan	The control has not received the proper fan speed feedback from the upper fan.
EIDW6305G	Alternating “Er” & “05”		
EWDW6505G	Error 6	Lower Fan	The control has not received the proper fan speed feedback from the lower fan.
EIDW6305G	Alternating “Er” & “06”		
EWDW6505G	Error 7	Drain Valve	In drain mode, the control has not received proper position feedback from drain valve.
EIDW6305G	Alternating “Er” & “07”		
EWDW6505G	Error 8	Tactile or Touch Switch	Control has verified a switch on user interface is bad or shorted.
EIDW6305G	Alternating “Er” & “08”		
EWDW6505G	Error 9	Communications	A communication failure between the user board and the power supply or main control.
EIDW6305G	Alternating “Er” & “09”		
EWDW6505G	Error 10	Main Relay	Failure in the main power relay.
EIDW6305G	Alternating “Er” & “10”		
EWDW6505G	Error 11	Drain Valve	Time out before finding a state for the drain valve.
EIDW6305G	Alternating “Er” & “11”		
EWDW6505G	Error 12	Drain Valve	The drain valve is running when it should be off this could be a shorted component.
EIDW6305G	Alternating “Er” & “12”		
EWDW6505G	Error 13	System Failure	The control has lost control of the unit.
EIDW6305G	Alternating “Er” & “13”		

Section 7

Wiring Diagrams

Electrolux

Model EWDW6505G

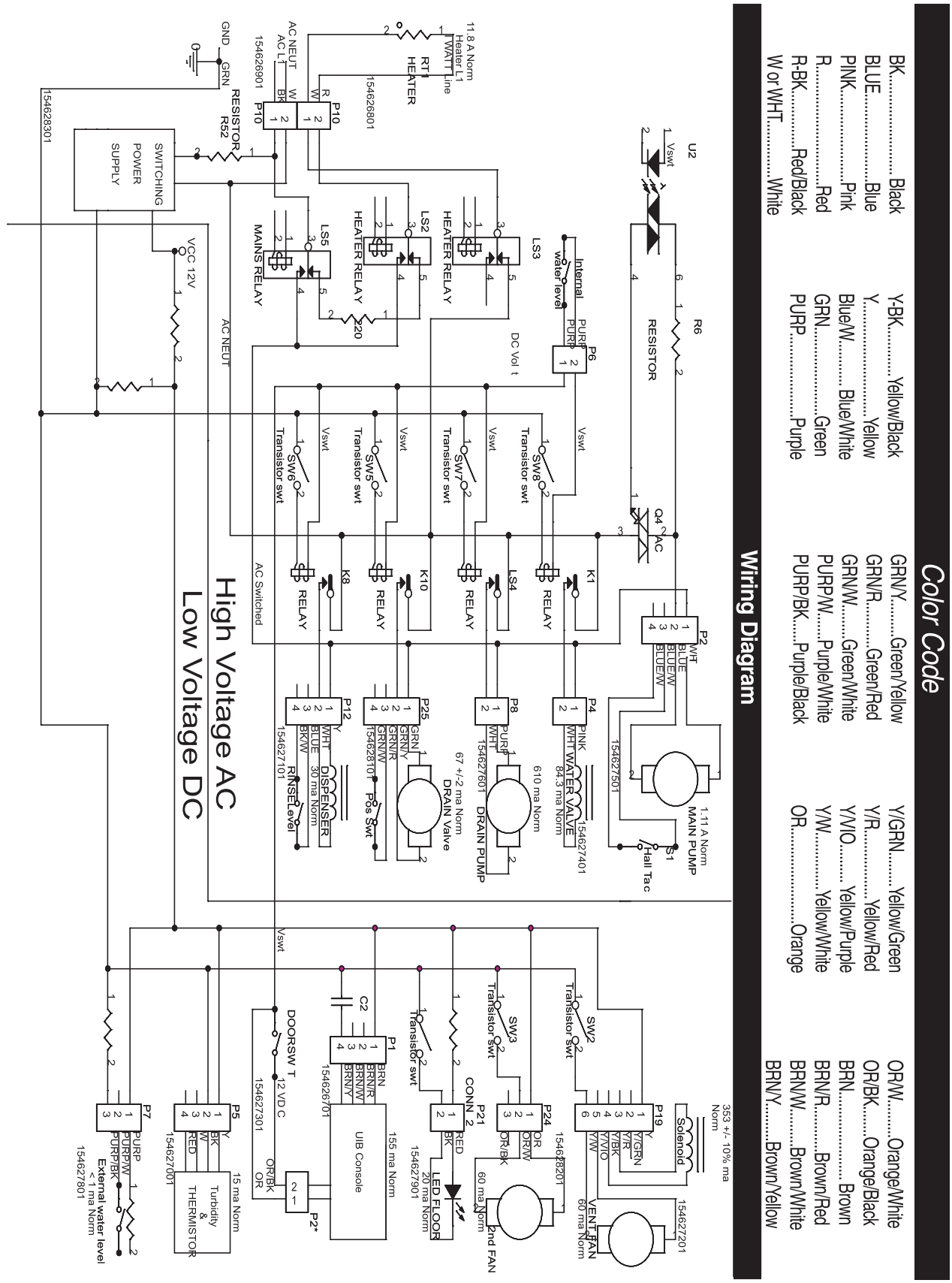

Model EIDW6305G

Color Code

BK.....Black	Y-BK.....Yellow/Black	GRN/Y.....Green/Yellow	Y/GRN.....Yellow/Green	OR/W.....Orange/White
BLUE.....Blue	Y.....Yellow	GRN/R.....Green/Red	Y/R.....Yellow/Red	OR/BK.....Orange/Black
PINK.....Pink	Blue/W.....Blue/White	GRN/W.....Green/White	Y/VIO.....Yellow/Purple	BRN.....Brown
R.....Red	GRN.....Green	PURP/W.....Purple/White	Y/W.....Yellow/White	BRN/R.....Brown/Red
R-BK.....Red/Black	PURP.....Purple	PURP/BK.....Purple/Black	OR.....Orange	BRN/W.....Brown/White
W or WHT.....White				BRN/Y.....Brown/Yellow

Wiring Diagram

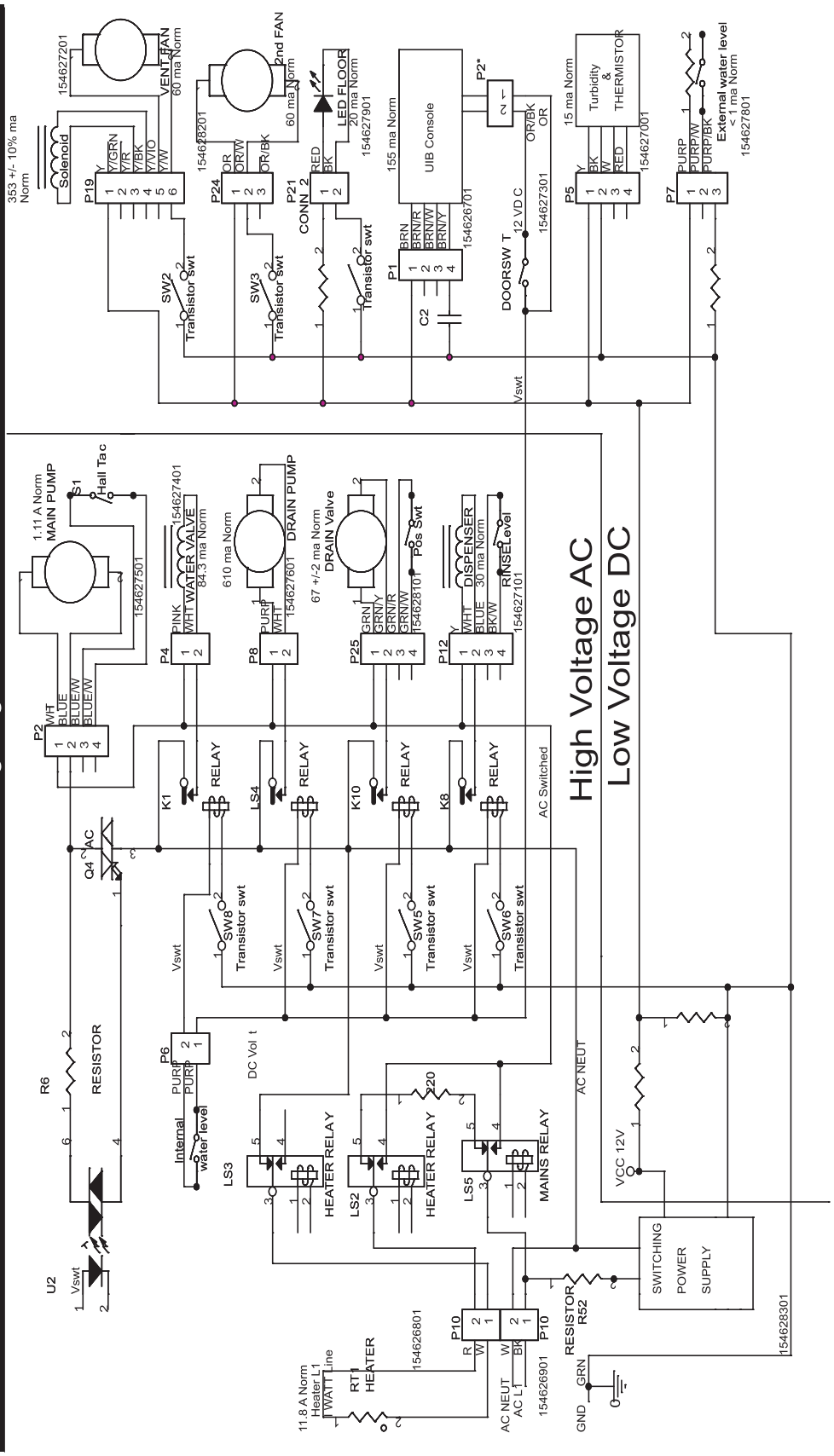

Electrolux

Model EIDW6105G

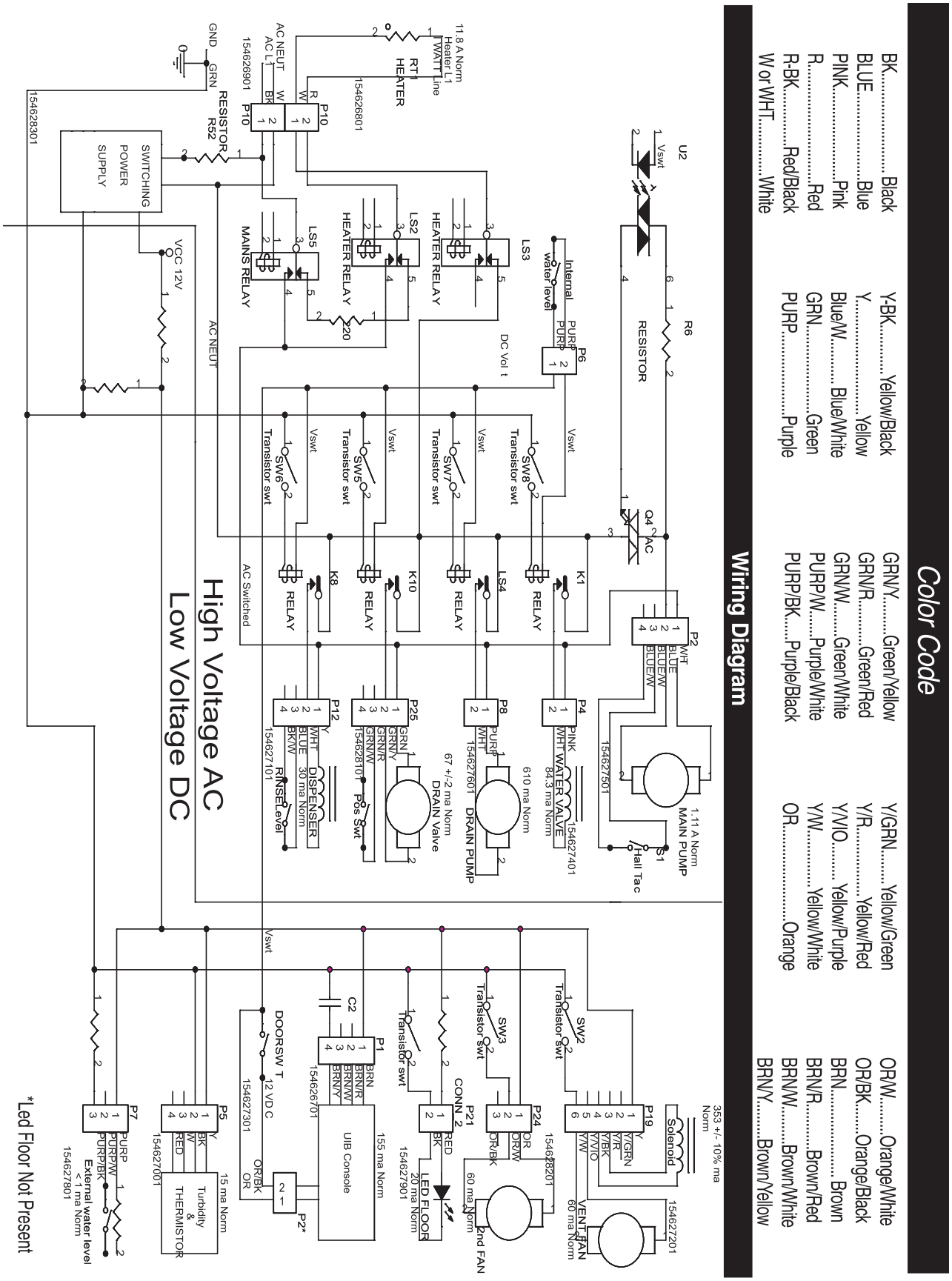
Color Code
BK.....Black
BLUE.....Blue
PINK.....Pink
R.....Red
R-BK.....Red/Black
W or WHT.....White
Y-BK.....Yellow/Black
Y.....Yellow
Blue/W.....Blue/White
GRN.....Green
PURP.....Purple
GRN/Y.....Green/Yellow
GRN/R.....Green/Red
GRN/W.....Green/White
PURP/W.....Purple/White
PURP/BK.....Purple/Black
Y/GRN.....Yellow/Green
Y/R.....Yellow/Red
Y/VIO.....Yellow/Purple
Y/W.....Yellow/White
OR.....Orange
OR/W.....Orange/White
OR/BK.....Orange/Black
BRN.....Brown
BRN/R.....Brown/Red
BRN/W.....Brown/White
BRN/Y.....Brown/Yellow
Wiring Diagram
High Voltage AC
Low Voltage DC
SWITCHING POWER SUPPLY
RESISTOR R52
HEATER RELAY
HEATER RELAY
MAINS RELAY
RELAY
RELAY
RELAY
RELAY
RELAY
RELAY
Transistor swt
Transistor swt
Transistor swt